ARMOR ARSENAL

5CGT0003

COLD GAS THRUSTER SPECIFICATION SHEET



www.armor-arsenal.com

5CGT0003

SPACECRAFT COLD GAS THRUSTER

PRODUCT OVERVIEW

The 5CGT0003 is a compact, high-efficiency cold gas thruster including a monostable, normally closed fast solenoid valve and delivering a minimum impulse bit of 20 mN·s, with valve response times of 3 ms on both opening and closing commands. This level of responsiveness enables precise spacecraft attitude control across a broad range of mission-critical applications, including rendezvous and docking operations, reaction wheel momentum unloading, and launch vehicle upper stage attitude control.

Parameter	Performances
Propellant	GN2
Material	Stainless steels, PTFE
Nominal thrust	2-4 N (MIB: 20-30 mN.s)
Specific impulse	> 60 sec
MEOP	25 bar
Proof	37,5 bar
Burst	> 50 bar
Leakage (internal)	< 10E-5 mbar.l/s (@MEOP, GN2)
Leakage (external)	< 10E-5 mbar.l/s (@MEOP, GN2)
Operating voltage	24 - 34 VDC
Power	< 50 W peak (< 2 W holding)
Coil resistance	27 Ω
Response (opening)	3 ms (typ.)
Reponse (closing)	3 ms (typ.)
Life (cycles)	> 100.000
Operating temperature	-20 °C / +110 °C (environment)
Dimensions	46.7 mm x 20 mm
Mass	70 gr

Armor Arsenal Proprietary information

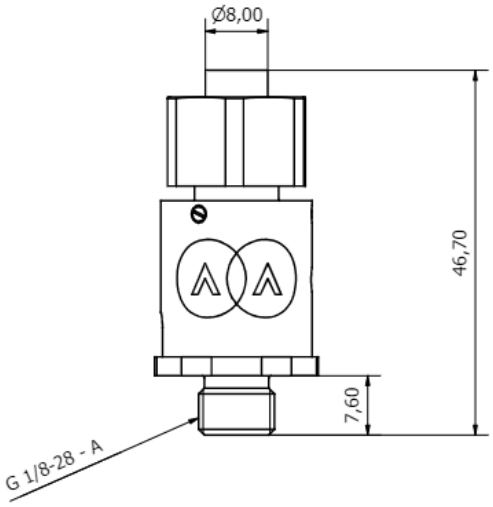

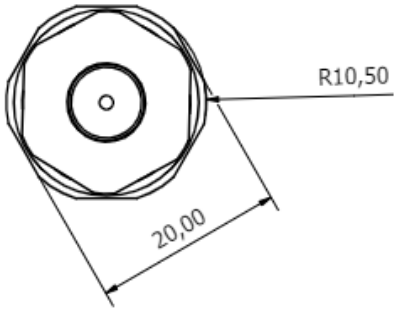

KEY FEATURES:

- Made in France, ITAR Free
- TRL 7
- Compact design
- Customizable
- Fast acting

ARMOR ARSENAL SAS
21 rue Louis de Broglie 22300 Lannion
www.armor-arsenal.com

© Armor Arsenal SAS • All rights reserved.

This document is not to be reproduced, modified, adapted, published, translated in any material form in whole or in part nor disclosed to any third party without the prior written permission of Armor Arsenal.