25N Thruster

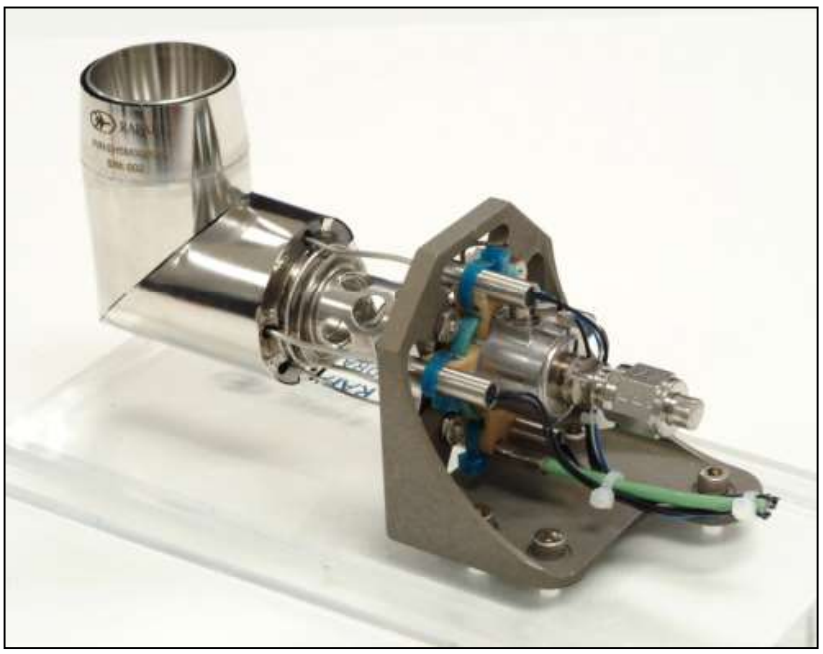

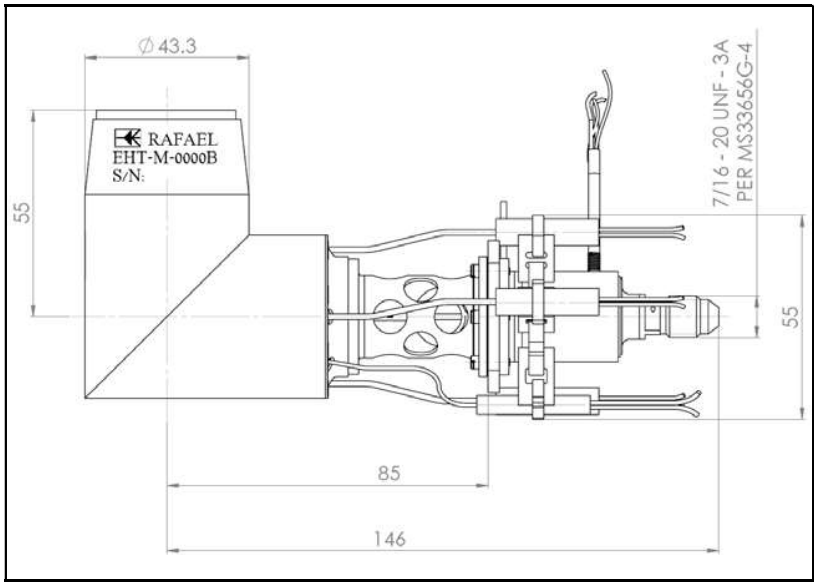

25N Thruster

RAFAEL
SMART AND TO THE POINT

Satellites Thruster PART D1

25N Thruster Main Characteristics

Parameter	Characteristics
Propellant	Hydrazine (N_2H_4)
Feed Pressure (bar abs.)	22 to 5.5
Thrust, Steady State (N)	28 to 9.5
SSF Specific Impulse (sec)	> 220 @ 22 bar
	> 205 @ 5.5 bar
Minimum Impulse Bit (N-s)	0.3
Nominal Duty Cycle	0.24 sec / 1 sec
Response Time (Hot Pulse)	
Rise Time (ms)	65 @ nominal duty cycle & 22 bar
Decay Time (ms)	200 @ nominal duty cycle & 22 bar
Total Delivered Impulse (N-s)	100,000 (<5%Isp degradation)
Total Number of Pulses:	12,000
Leakage	
Internal Leakage (Scc/s GHe):	$<1.0x10^{-4}$ @ 3.5 & 24
External Leakage (Scc/s GHe):	$<1.0x10^{-6}$ @ 24
Temperature	
Operating Temperature	+4°C to 90°C
Non-Operating Temperature	-10°C to 90°C
Flow Control	FCV - single-coil, dual-seat, NC solenoid valve
FCV Operating Voltage (Vdc)	23 to 36
FCV Power (W)	15 @ 28 Vdc
Heaters – 4× Single Heaters	
Heater Operating Voltage (Vdc)	24 to 32
Heater Resistance (ohms)	260 per each heater
Nozzle Expansion Ratio	60
Total Life (Storage & Flight)	15 years
Inlet Filtration	15 microns absolute
Inlet Interface	MS 33656-4 or welded tube (1/4" or 3/8")
Weight (gr.)	≤ 530 (1000 mm lead wires length)
Heritage	Flight heritage with OFEQ and EROS programs