www.dcubed.space



Datasheet

Micro Pin Puller
uD3PP

Last updated on:
2025-06-10

Description

The Dcubed Micro Pin Puller (uD3PP) is a Shape Memory Alloy (SMA) based release actuator designed to secure sensitive equipment during launch and safely release it on orbit. Micro Pin Pullers constrain shear loads and represent one of the smallest, most powerful HDRM (Hold Down and Release Mechanism) solutions available. They are easily resettable allowing for repeated use across numerous test campaigns. Readily available as a COTS component, the uD3PP has a 12mm stroke (see Figure 1 for more details). All units presented in this document are metric, with the corresponding imperial units in square brackets [].

Table 1: uD3PP specification

Specifications/Configuration	**uD3PP** Aluminum-Steel (1-13-2)
Body Size (L x W x H)	Ø 28 x 51.5mm [1.1 x 20.27 in]
Mass	85 grams [0.187 lbf][1]
Material	**Body**: Aluminum 7075-T7351 with Bonderite M-CR 1200 S Aero coating **Pin**: Stainless Steel 17-4PH
Operating Temperature Range	-35 °C to +75 °C [-31 °F to 165 °F][1]
Pin Dimensions	Ø 8 mm x 12 mm [Ø 0.315 x0.472 in]
Stroke	>11.5 mm [0.433 in][1]
Maximum Sideload (Shear)	180N [40.47 lbf][1]
Rapidly Resettable	Yes (front and rear)
Redundancy	Redundant Wiring and Redundant SMA
Internal Actuation Sensor	No
Shock Pad	Yes
Reset Cycles	>100[1]
TRL	7

[1] Given value to be confirmed

Interfaces

Mechanical Interface

All interface threaded holes in aluminum parts have free running Stainless Steel helicoils.

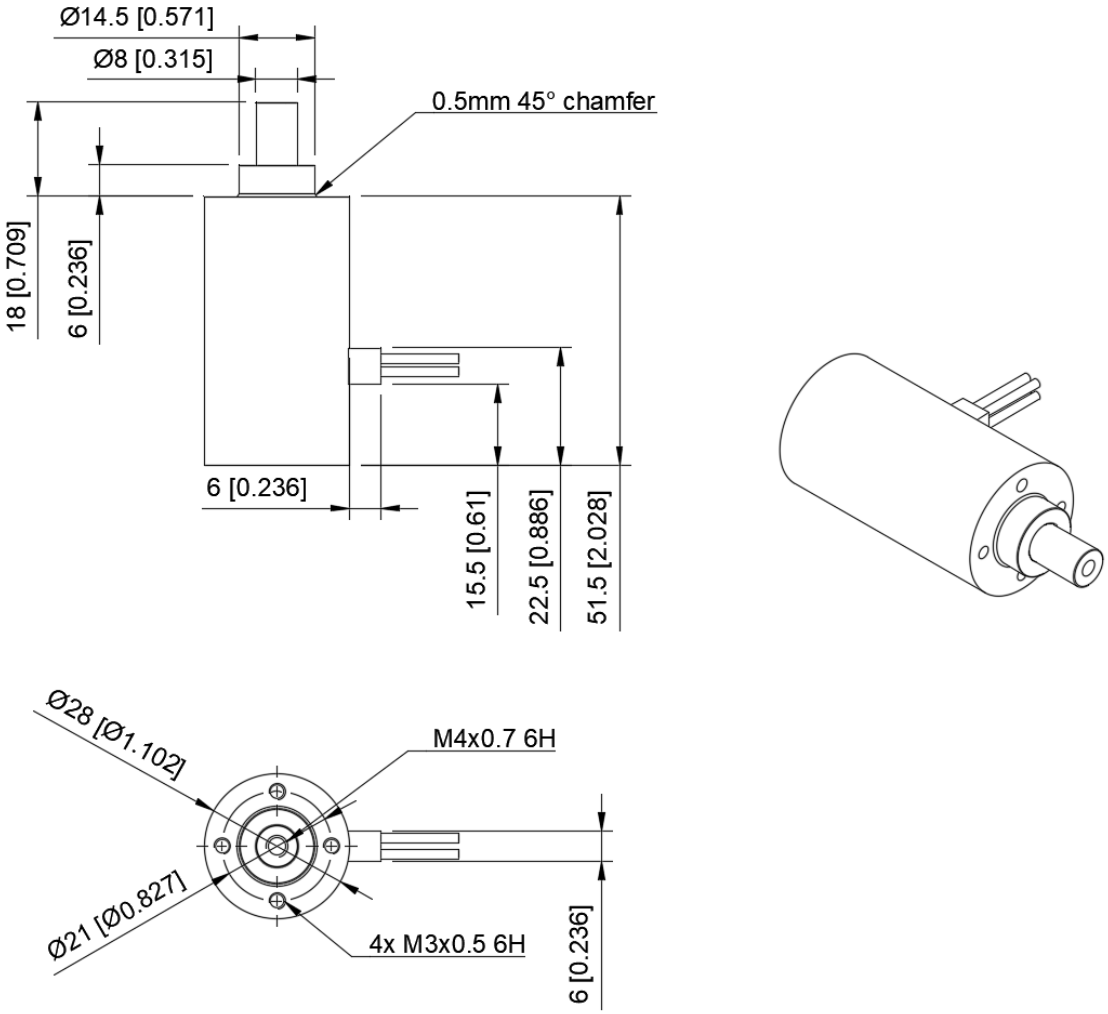

Figure 1: Dimensions and mechanical interfaces of the uD3PP-12A with 12mm stroke and axial mounting.

Electrical Interface

The standard electrical interface of the uD3PP is shown in Figure 2. Please note that the uD3PP does not include a feedback line.

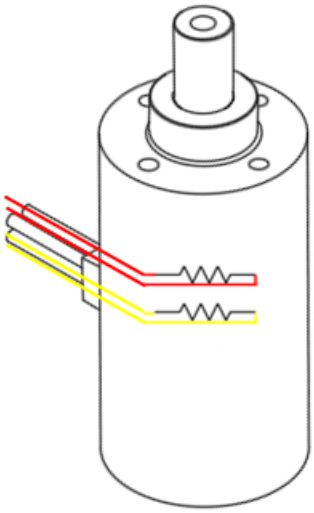

Figure 2: Electrical wiring of the uD3PP.

To trigger the pin puller, a current must be applied across one of its actuation lines. The actuation lines are color-coded wire pairs: yellow-yellow (primary) and red-red (secondary). The actuation line behaves like a simple resistor (see Table 2), with no specific polarity.

Table 2: Electrical details

Electrical Details		uD3PP
Actuation Leads		1 Primary Pair, 1 Redundant Pair
Wire Length		>200 mm
Material		Silver-plated Copper, PTFE insulated Fulfills MIL-W-16878/4 (Type E)
Actuation Wire Gauge		24 AWG
Actuation Current		1.6 to 2 A (DC)
Resistance (Ω)		0.9 ± 0.2 Ω (@ Room Temperature)
Sensor Wire Gauge		N/A
Estimated trigger time[2] at 2.0 A and 0 N [0 lbf] preload in vacuum	-35 °C [-31 °F]	0.65 sec
	0 °C [32 °F]	0.45 sec
	20 °C [68 °F]	0.35 sec
	75 °C [167 °F]	0.2 sec

[2] More detailed specifications regarding temperature and current dependent trigger times can be found in the Dcubed user manual, available upon order placement. Ultra-fast triggering is possible at reduced number of possible resets. Please contact support@dcubed-space.com for more information.

Loads

The uD3PP was tested to sustain the following mechanical loads in Table 3.

Table 3: Load levels

Details	Load Level	Note
Resonance search (X, Y, Z)	1st Eigenfrequency: >2 kHz[3]	
Random Vibration (X, Y, Z)	30 GRMS (PSD)	
Sinusoidal Vibration (X, Y, Z)	20 g	20-130 Hz
Shock (X, Y, Z)	100 Hz: 110 g 1000 Hz-10000 Hz: 1500 g[3]	SRS
Side Load (actuating)	180 N [40.47 lbf]	Maximum side load under which the pin retracts
Pull Force	70 N [15.74 lbf] (uD3PP-12)	Maximum axial force with which the pin is retracted
Proof Load (non-actuating)	Axial (Push-in): 120 N [26.98 lbf] Shear (Side-load): 500 N[112.4 lbf][3]	Specified loads are the maximum which the actuator can sustain in a non-actuated state. For Maximum actuation loads, refer to Table 1.

[3] Given value to be confirmed

Disclaimer

The specifications contained herein are all nominal which represent our current production. The products described may be subject to change. The images shown are for illustration purposes only and may not be an exact representation of the product.

Contact us,
we'd love to hear from you!

sales@dcubed-space.com

www.dcubed.space