nano avionics

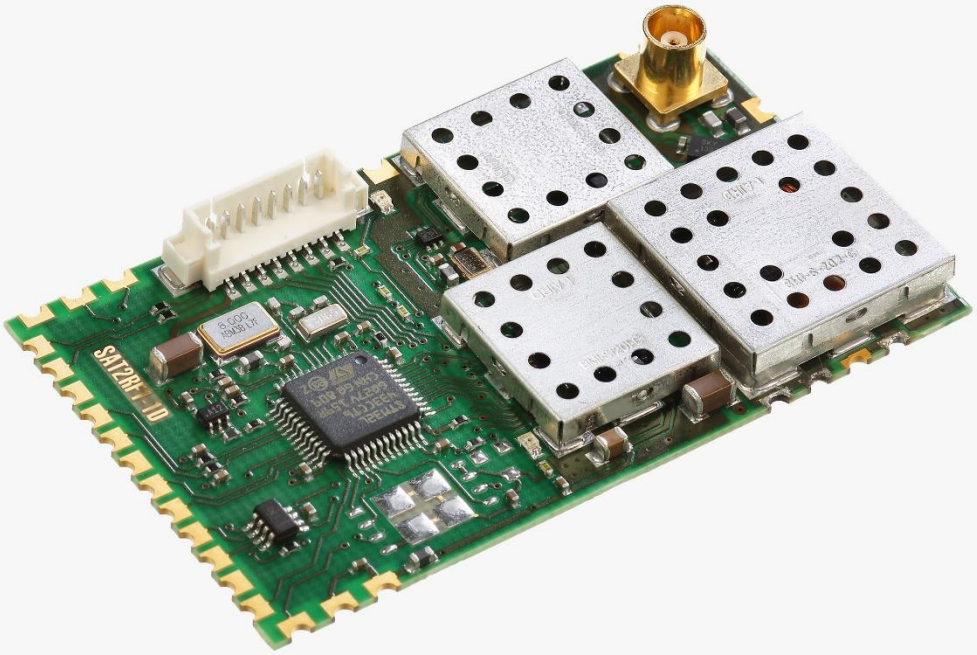

UHF Radio

SAT2RF1-1D

Data Sheet

NA-UHF-G1-R3

Address: 2901 Enterprise Lane Midland, Texas 79706
Mobile: +1 432 276 3966
E-mail: info@n-avionics.com

n-avionics.com

Document revisions traceability sheet

Rev. 0	**Date:** 2018-10-15
Changes: Original issue	
Rev. 1	**Date:** 2018-11-08
Changes: Data sheet design update	
Rev. 2	**Date:** 2019-02-27
Changes: Specs update.	

Contents

1 Feature Overview 4
2 Functional Description 4
3 Specifications 6
3.1 RF Characteristics 6
3.2 Absolute Maximum and Minimum ratings 6
4 Electrical Interface 8
4.1 MCX RF Connector 8
5 Command and Data Interface / Protocol 9
6 Mechanical Layout 9
6.1 Physical Dimensions 9
6.2 Mechanical Specifications 9
7 Handling Conditions 10
7.1 Protection for Electrostatic Discharge Sensitive (ESDS) devices 10
7.2 General Handling 10
7.3 Shipping and Storage 10
8 Disclaimer 11

1 Feature Overview

- RF Architecture: half duplex
- Frequency range: 395-440 MHz
- Operation modes:
  - G3RUH
  - Native packet
- Modulation:
  - G3RUH mode: FSK2
  - Native mode: GFSK2 (MSK) / GFSK4 (MSK)
- Symbol rate:
  - G3RUH mode: 9600 baud
  - Native mode: 2400 / 4800 / 9600 / 14400 / 19200 baud
- Bit rate:
  - G3RUH mode: 9600 bps
  - Native mode: 2400 / 4800 / 9600 / 14400 / 19200 / 28800 / 38400 bps
- RF output power: up to 2 W
- Typical sensitivity:
  - G3RUH mode: -118 dBm
  - Native mode: -122 dBm (GFSK2, 2400 bps)
  - Native mode: -112 dBm (GFSK4, 38400 bps)
- Data packet format:
  - G3RUH mode: AX25
  - Native mode: native packet format
- Bit encoding:
  - G3RUH mode: NRZI encoding, data whitening polynomial $1 + x^{12} + x^{17}$
  - Native mode: data whitening PN9 sequence

2 Functional Description

The system block diagram of the UHF radio is shown in Figure 1 UHF Radio System Block Diagram. The UHF radio utilizes a half-duplex architecture with high performance low power consumption transceiver which is controlled by a dedicated ARM Cortex-M4 MCU. The radio uses ultra-high frequency band (UHF) that is programmable in 395 to 440 MHz range. The RF part of the module is based on CC1200 chip.

The module supports amateur radio G3RUH and native CC1200 communication protocols. The G3RUH protocol is supported with fixed 9600 bps bit rate (FSK2 modulation), while CC1200 native packet mode offers from 2400 to 38400bit rates (GFSK2 or GFSK4 modulation). In native packet mode modulation is configured to be ¼ of symbol rate and consequently, it is MSK modulation.

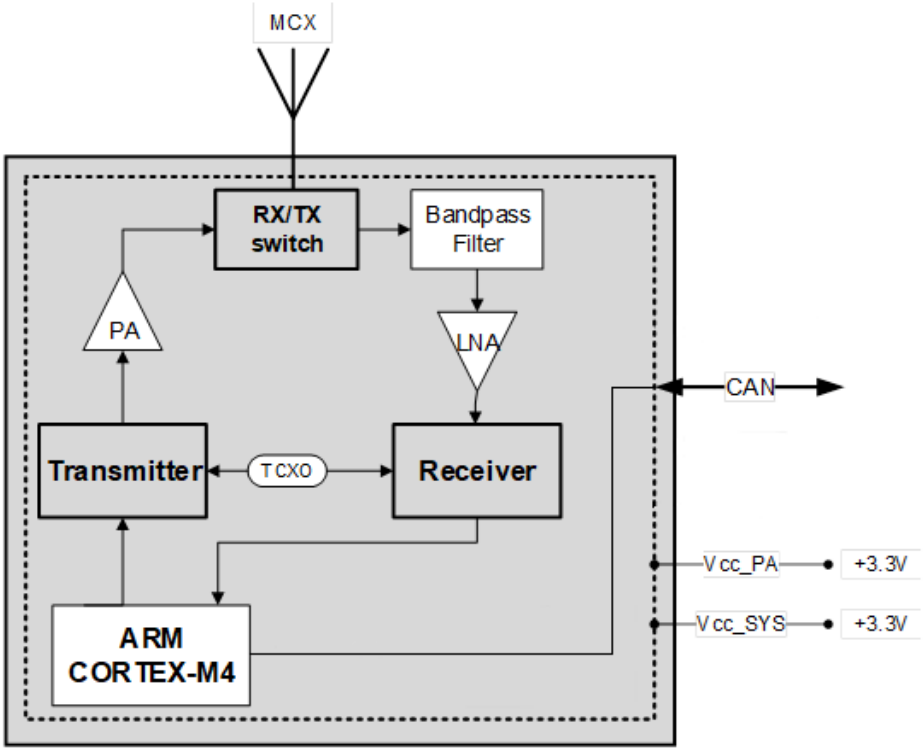

Figure 1 UHF Radio System Block Diagram

The module software has two options: local configuration, where the radio is completely controlled by PC, and remote configuration, which is dedicated for stand-alone operation. In the case of local configuration, UART interface is used. In the case of remote configuration, CSP protocol over CAN interface is used for communication. The local module may send a request to the remote and change RF bit rate via handshaking procedure. RF link termination or unsuccessful bit rate change will force the remote module switch to default mode with best sensitivity.
The power amplifier and system logic are supplied by separate 3.3 V power lines for electromagnetic compatibility reasons. The radio has CAN data interface for communication with external subsystems. The power amplifier (PA) operates at constant gain with output power depending on the input signal level from the transceiver which is controlled in -16 dBm…+6 dBm interval. The temperatures of the power amplifier and the TCXO oscillator are monitored and available via UHF subsystem telemetry.

3 Specifications

3.1 RF Characteristics

Table 1 - RF Characteristics

Parameter	Min	Typ	Max
Frequency band, MHz	395	-	440
Frequency resolution, Hz	-	19.1	-
Receiver sensitivity (G3RUH mode, FSK2, 9600 bps), at 10% bit error rate, dBm	-118	-122	-
Receiver sensitivity (native packet, GFSK2, 2400 bps), at 10% bit error rate, dBm	-122	-128	-
Max power amplifier RF output power @50Ω Load, dBm	33.0	33.6	-
Receiver noise temperature, with 290 K reference, K	-	-	316
Total receiver input loss, dB	-	-	1.7
Receiver noise figure, dB	-	-	0.9
Required Eb/No, dB	12	-	-
Recommended Eb/No, dB	-	14	-
First LNA gain, dB	-	15	-

Table 2 - Operation Modes

Name	Modulation	Deviation, kHz	BW, kHz	Symbol rate, baud	Bit rate, bps
G3RUH	FSK2	3	19.8	9.6	9.6
GFSK2_2400	GFSK2	0.6	9.5	2.4	2.4
GFSK2_4800	GFSK2	1.2	9.5	4.8	4.8
GFSK2_9600	GFSK2	2.4	19.8	9.6	9.6
GFSK2_14400	GFSK2	3.6	29.8	14.4	14.4
GFSK2_19200	GFSK2	4.8	41.7	19.2	19.2
GFSK4_2400	GFSK4	0.6	9.5	2.4	4.8
GFSK4_4800	GFSK4	1.2	9.5	4.8	9.6
GFSK4_9600	GFSK4	2.4	19.8	9.6	19.2
GFSK4_14400	GFSK4	3.6	29.8	14.4	28.8
GFSK4_19200	GFSK4	4.8	41.7	19.2	38.4

3.2 Absolute Maximum and Minimum ratings

Table 3 - Absolute Minimum and Maximum Ratings

Parameter	Min/Idle	Typ	Max
Input Voltage on Vcc_SYS pin	2 V	3.3 V	3.6 V
Input Voltage on Vcc_PA pin	3 V	3.3 V	4 V
I/O Voltage Level	2 V	3.3 V	3.6 V
Operating Temperature	-40 °C	-	+85 °C
Storage Temperature	-40 °C	-	+125 °C
Power Dissipation of Power Amplifier	-	3.2 W	5 W
Current Consumption:			
on Vcc_SYS line @RX/TX mode	-	-	70 mA
on Vcc_PA line @TX mode	-	1600 mA*	2000 mA

* At max RF output power



WARNING: A heat sink must be used to transfer the dissipated heat from the power amplifier. The transceiver must not be operated at a higher than maximum operating temperature.

4 Electrical Interface

The UHF radio is designed as a PCB module which can be mounted on NanoAvionics Main Bus Unit "SatBus 3C2." Figure 2 below and Table 4 show the module pinout.

Table 4 - Module Pinout

	Name	Description
1	GND	Ground
2	GND	Ground
3	Reserved	Reserved, do not connect
4	Reserved	Reserved, do not connect
5	GND	Ground
6	Reserved	Reserved, do not connect
7	Reserved	Reserved, do not connect
8	NC	Not connected
9	Reserved	Reserved, do not connect
10	Reserved	Reserved, do not connect
11	NC	Not connected
12	Reserved	Reserved, do not connect
13	Reserved	Reserved, do not connect
14	CANL	CAN Low Signal
15	CANH	CAN High Signal
16	NC	Not connected
17	Reserved	Reserved, do not connect
18	RST	Module Reset, do not connect
19	GND	Ground
20	Vcc_SYS	Vcc_SYS logic power supply
21	GND	Ground
22	GND	Ground
23	3.3V_PA	3.3V Power Amplifier power supply
24	3.3V_PA	3.3V Power Amplifier power supply
25	GND	Ground

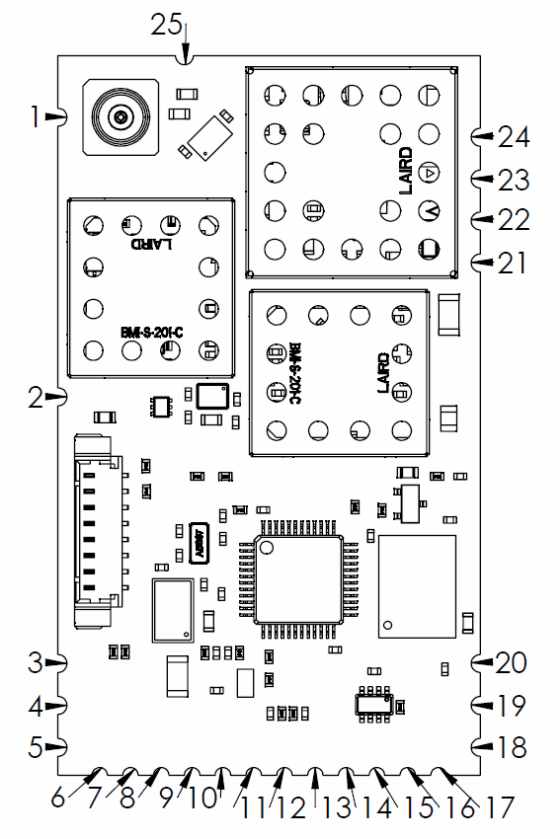

Figure 2 - Module Top View and Pinout

4.1 MCX RF Connector

MCX 50 Ohm co-axial connector is used for antenna RF cable connection.



Figure 3 - MCX RF Connector

5 Command and Data Interface / Protocol

This UHF module is currently only sold as part of NanoAvionics platforms, and the data protocol is not available for customer integration.

6 Mechanical Layout

6.1 Physical Dimensions

All dimensions are given in mm.

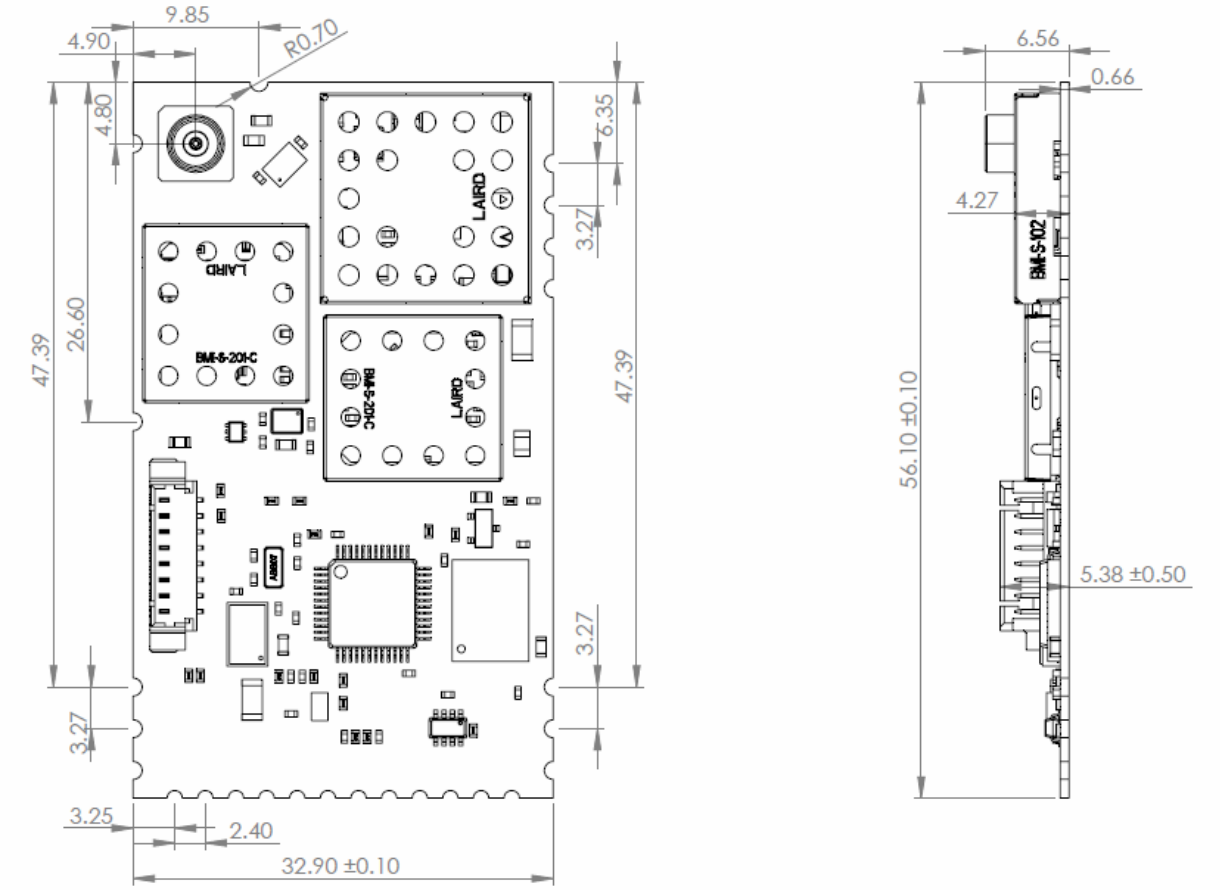

Figure 4. Module Dimensions

6.2 Mechanical Specifications

Table 5 - Mechanical Specifications

Parameter	Value
Mass, UHF Stand-alone Radio	7.5 g
PCB Material	FR-4 (E-glass/epoxy)
Assembly Level	IPC-A-610 Class 2

7 Handling Conditions

7.1 Protection for Electrostatic Discharge Sensitive (ESDS) devices

1. Work area:



- It is essential to handle ESDS devices at static-safe workstations. This will prevent yield loss (through catastrophic damage) or worse, potential reliability failures in the field (through latent damage).
- Where it is impractical or impossible to use antistatic wrist-straps or remove items that are composed of insulative materials at a static-safe workstation, use an air ionizer designed to neutralize electrostatic charges or apply topical antistats to control generation and accumulation of static charges.
- When an air ionizer is utilized, it is vital that maintenance procedures and schedules are adhered to in order to ensure that ions generated by the ionizer are sufficiently balanced.
- Avoid bringing sources of static electricity within 1 meter of a static-safe work bench.
- Where it is necessary to use air-guns, use special models that do not generate static charges in the air stream.

2. Personnel:

- Any accumulated charge on the body of the human operator should be discharged first before opening the protective container with ESDS devices inside. The discharge can be accomplished by putting a hand on a grounded surface or, ideally, by wearing a grounded antistatic wrist-strap.
- The use of an antistatic smock for each worker is highly recommended.



WARNING: Do not operate radio transmitter without antenna connected to the radio TX output port
Note: The impedance of the antenna must be 50 Ohms.



WARNING: Make sure the transceiver is cooled properly.

7.2 General Handling

Gloves (ESD compliant) should be worn when handling all flight hardware.
The COMM is robust and designed to withstand flight conditions. However, care must be taken when handling the device. Do not drop the device.

7.3 Shipping and Storage

The devices are shipped in anti-static packaging, enclosed in a Peli case. This case should be used for storage. All hardware should be stored in anti-static containers at temperatures between 20°C and 40°C and in a humidity-controlled environment of 40-60%rh.

8 Disclaimer

The information in this document is subject to change without notice and should not be construed as a commitment by NanoAvionics, LLC. NanoAvionics assumes no responsibility for any errors that may appear in this document.