SteamJet

The New Age of Steam in Space

The TunaTank Thruster

Water-Powered Propulsion Technologies

For Small Satellites and CubeSats

The TunaTank Thruster is a safe, high-performance, electrothermal propulsion system specifically designed for CubeSats. Its unique shape factor allows to use the tunacan volume available in many CubeSats deployers, located outside the main CubeSat structure. Using only low-pressure water, the TunaTank Thruster stores more propellant and delivers higher total impulse for demanding CubeSat missions.

Optimization & Manoeuvres

Collision Avoidance

Constellation Management

Life Extension

De-Orbit

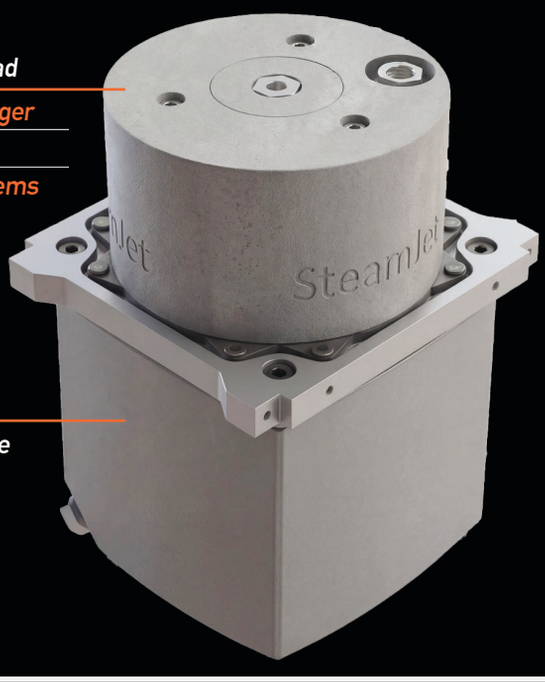

High Thrust

50x More Than Electric Propulsion

Low Power Consumption

Safe

Low Pressure Water as The Main Propellant

Easy to Integrate and Operate

No RF interference

ITAR-Free, No Import Hurdles

Short Lead Time

For more Info and Orders

team@steamjet.space

https://steamjet.space

Alpha Works, Alpha Building, Suffolk St Queensway, Birmingham, B1 1TT

Specifications	Value
Nominal Thrust (mN)	5-20
Specific Impulse (s)	Up to 172
Total Impulse (Ns)	Up to 600
Minimum Impulse Bit [mNs]	10
Power consumption Thrusting / Idle [W]	<19.9 / 0.12
Wet Mass [g]	900
Propellant Mass [g]	350
Propellant	Water*
Voltage [VDC]	9 - 14
Communication Protocol	RS 422, TTL UART
Dimensions [mm]	98.6 x 90 x 129

*Water-Alcohol mixture possible to reduce the freezing point up to -30 °C

Dimensions

TunaTank

S J
S S

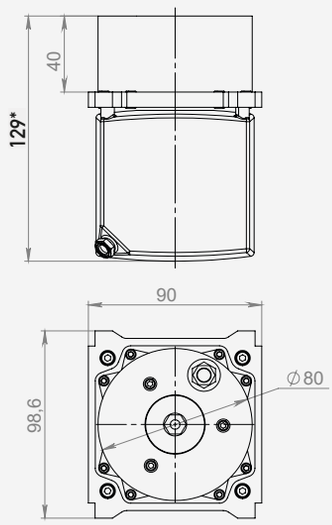

* can be customised

Power vs Isp

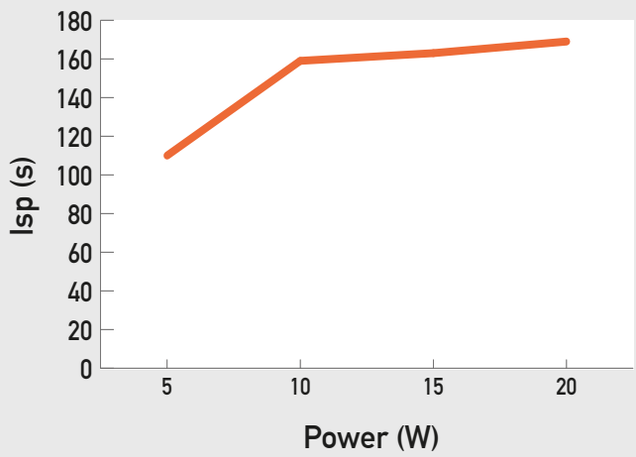

Space qualified according to ESA ECSS-E-ST-10-03C and NASA GSFC-STD-7000A

The TunaTank Thruster can be operated with a power between 5W to 20W depending on the CubeSat availability

Typical Applications

3U (5KG) SATELLITE @ 400KM INITIAL ORBIT

Product	Total Impulse (Ns)	DeltaV (m/s)	Orbital Change (Km)	Orbit Phasing	Collision avoidance
No Propulsion	0	0	No	No	No
TunaTank	*600*	*114*	*± 206*	*0° to 360°*	*Yes*

6U (10KG) SATELLITE @ 400KM INITIAL ORBIT

Product	Total Impulse (Ns)	DeltaV (m/s)	Orbital Change (Km)	Orbit Phasing	Collision avoidance
No Propulsion	0	0	No	No	No
TunaTank	*600*	*58*	*± 105*	*0° to 360°*	*Yes*