PEPT-590GB



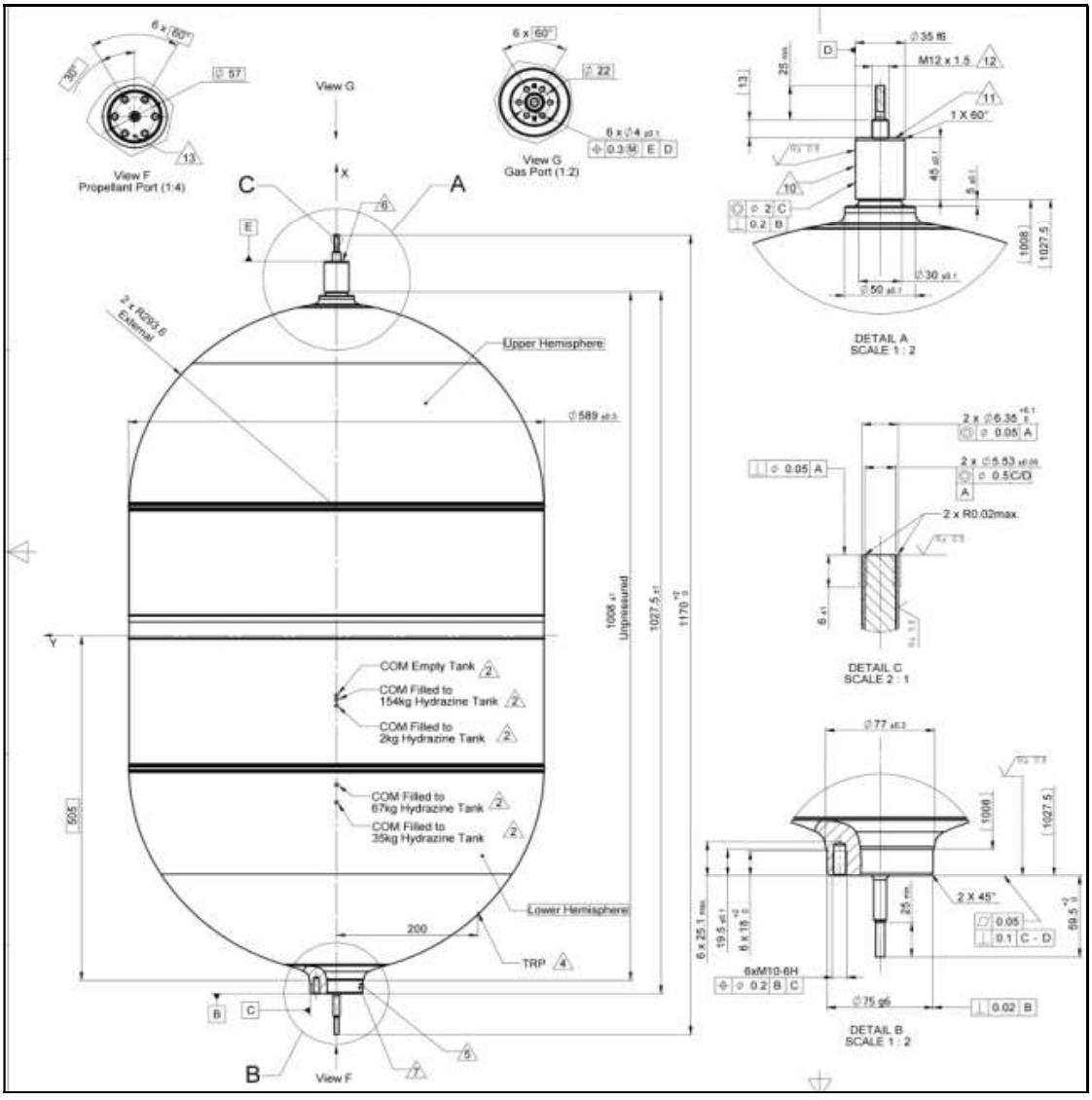
View F
Propellant Port (1:4)
View G
View G
Gas Port (1:2)
Upper Hemisphere
Lower Hemisphere
COM Empty Tank
COM Filled to 154kg Hydrazine Tank
COM Filled to 2kg Hydrazine Tank
COM Filled to 67kg Hydrazine Tank
COM Filled to 35kg Hydrazine Tank
TRP
DETAIL A
SCALE 1 : 2
DETAIL C
SCALE 2 : 1
DETAIL B
SCALE 1 : 2
View F

PEPT-590GB

PEPT-590GB Main Characteristics

Configuration	Cylindrically extended hemispheres, nominal ∅587 mm x 1,170 mm length
Fluid Media Compatibility	Hydrazine, IPA, distilled water, GN_2, GHe
Pressurizing Media	GN_2, GHe
Nominal Volume	204 liters
Propellant Nominal Capacity	154 kg @ 4: 1 blow-down ratio
Liquid Volumetric Expulsion	> 99%
Pressure	
Operating	27.4 to 5.5 bar
Proof	41.1 bar
Burst	54.8 bar (actual rupture at 72 bar)
Leakage	
Internal Leakage	$<1x10^{-2}$ Scc/s (GHe)
External Leakage	$<1x10^{-6}$ Scc/s (GHe) at 27.4 bar
Material	
Tank	Ti-6Al-4V
Diaphragm	EPN-40 (silica free)
Ports	ø 1/4” weldable connections for both gas and hydrazine ports
Weight	17.5 kg
Temperature	
Operating (Qualification)	4°C to 50°C
Non-Operating (Qualification)	-20°C to 60°C
Service Life	
Storage	7 years
Flight	15 years
Mounting	Polar mounting
Heritage	Designed and qualified for Globalstar-2, flight heritage with GB2, O3B and Sentinel-1 satellites in orbit, delivered for COSMO SG