nano avionics

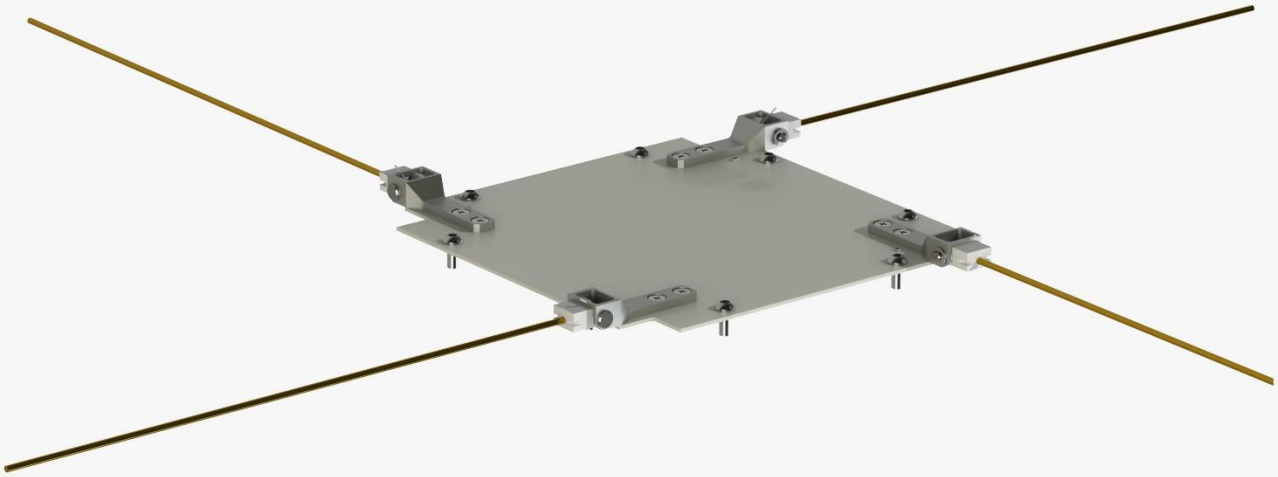

UHF Antenna System

Datasheet

NA-RFS-G1-R0

Address: 2901 Enterprise Lane Midland, Texas 79706
Mobile: +1 432 276 3966
E-mail: info@n-avionics.com

Document Revisions Traceability Sheet

Rev. 0	**Date:** 2018-12-04

Changes: Original Issue

Contents

1 Feature overview 4
2 Compatibility 4
3 Functional Description 4
4 Antennae 4
4.1 Polarization 5
4.2 Gain 6
4.3 Deployment 6
4.4 Mounting options 7
5 Mechanical Drawing 8
6 Disclaimer 9

1 Feature overview

- Frequency Range - 400-500 MHz
- Antenna compatibility – Turnstile/Quad-Monopole (circular polarization)
- RF Impedance - 50 Ohm
- Max RF Power - 10 W
- Insertion Loss - < 1,3 dB
- Frequency range 400-500 MHz
- Return Loss (400-500 MHz) - > 28 dB
- Mass – 42 g
- RF input connector - MCX (50 Ohm)
- Temperature range - -40 °C +85 °C
- Optional hole in the splitter can be provided for payload integration of other purposes

2 Compatibility

- NanoAvionics products
- CubeSat Kit platform
- Innovative Solutions in Space (ISIS) structure

3 Functional Description

NanoAvionics UHF Antenna System consists of RF Splitter and 4 monopole antennae. RF Splitter is a key element in turnstile antenna systems which does impedance matching and splits one RF signal into a phasing network in order to form a single circular polarized antenna. This results in almost omnidirectional radiation pattern with no blind spots, which can cause signal fading due to satellite tumbling. An aperture can be provided inside the splitter board for hardware integration purposes.

4 Antennae

4 monopole antennae are connected to each splitter output to assemble a complete system. NanoAvionics can provide deployable antenna systems integrated within a splitter or a customer can implement his own solution. An example of a deployable turnstile antenna array with RF splitter is shown in Figure 1.

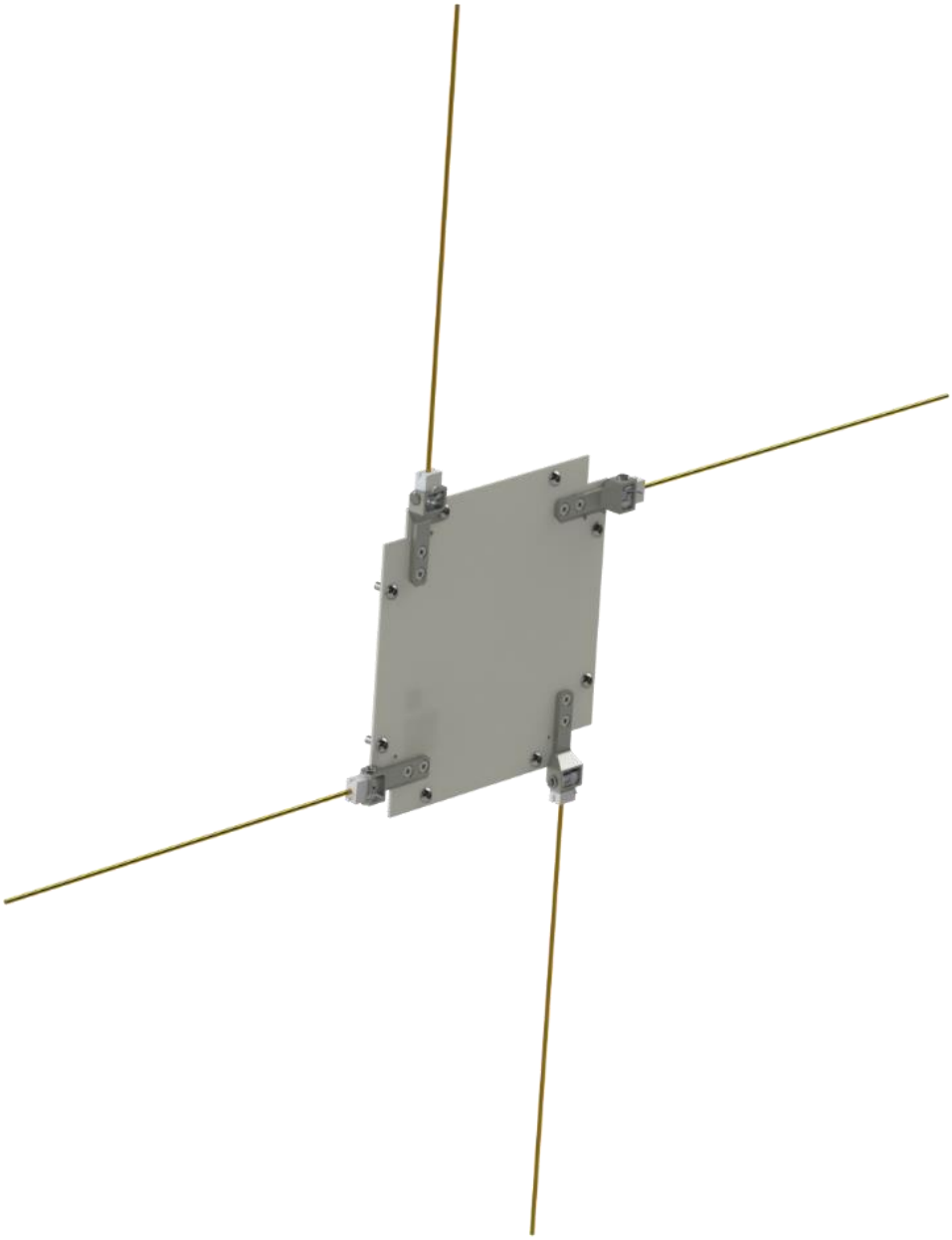

Figure 1. UHF Antenna System with omnidirectional radiation pattern

4.1 Polarization

The antenna array is circularly polarized when seen from the top (left hand) and bottom (right hand) transitioning to linear polarization (horizontal/vertical) in the antenna plane.

4.2 Gain

The actual gain characteristics are always satellite specific. Below in Figure 2 is a simulated plot for a LituanicaSAT-2 3U satellite with the turnstile UHF antenna array (antennas are 90 degrees to the long axis). The highest gain (2.03 dBi) is along the long (Z) axis of the CubeSat with lower gains (-1.9 to -0.2 dBi) along the X- and Y-axes.

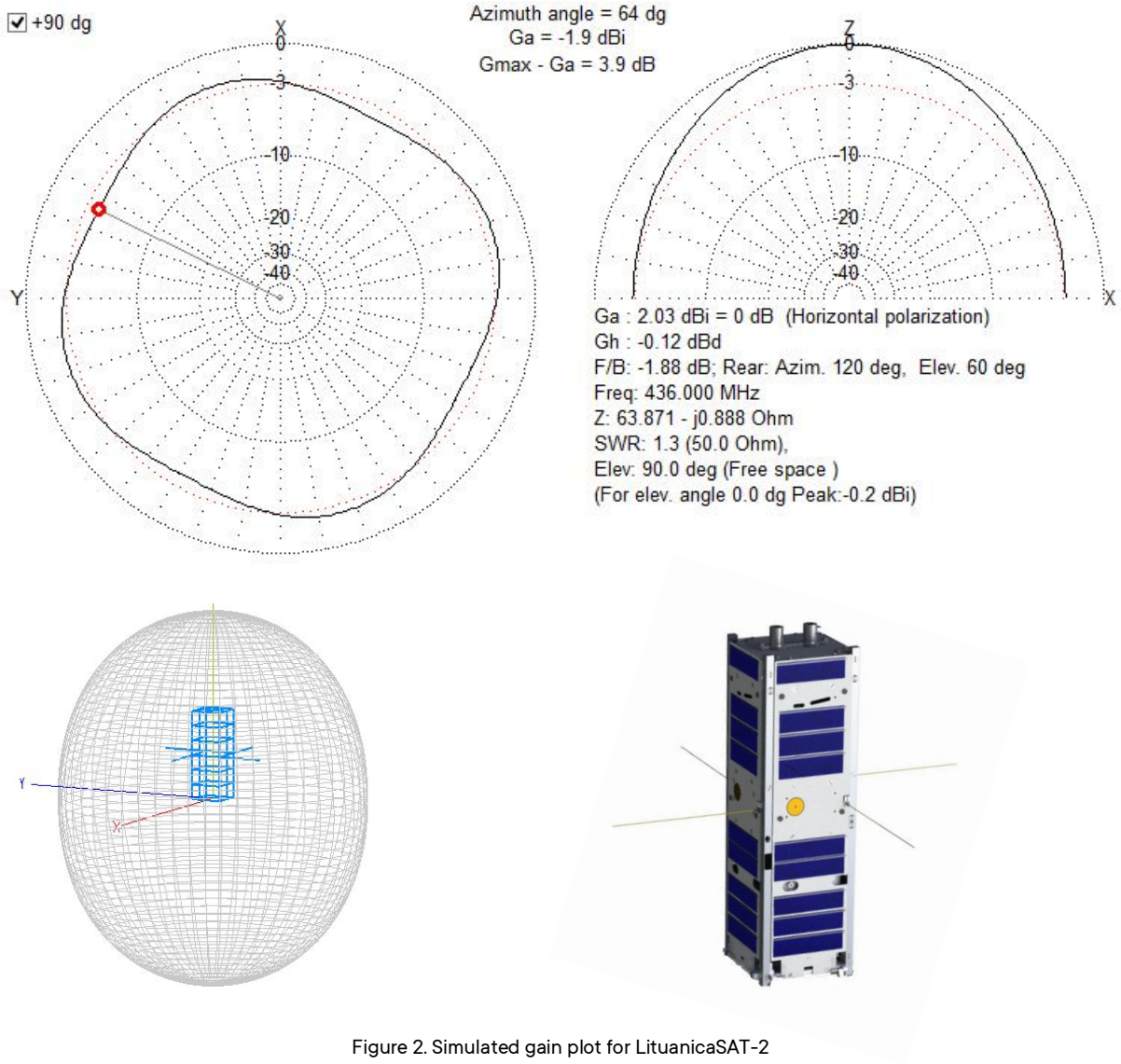

Figure 2. Simulated gain plot for LituanicaSAT-2

4.3 Deployment

Each antenna is mounted on a spring loaded hinge with 7075 grade aluminum housing. Special care is taken during design so that torsional springs are not overstressed in stowed configuration at any time (90 degrees from normal deployed state or as specified by customer). Various deployment mechanism options can be implemented. There is no deployment system included in the antenna system. NanoAvionics antenna deployment system can be ordered separately.

4.4 Mounting Options

Figure 3 shows UHF antenna system mounted on top of the CubeSat with the deployment mechanism integrated into solar panels.

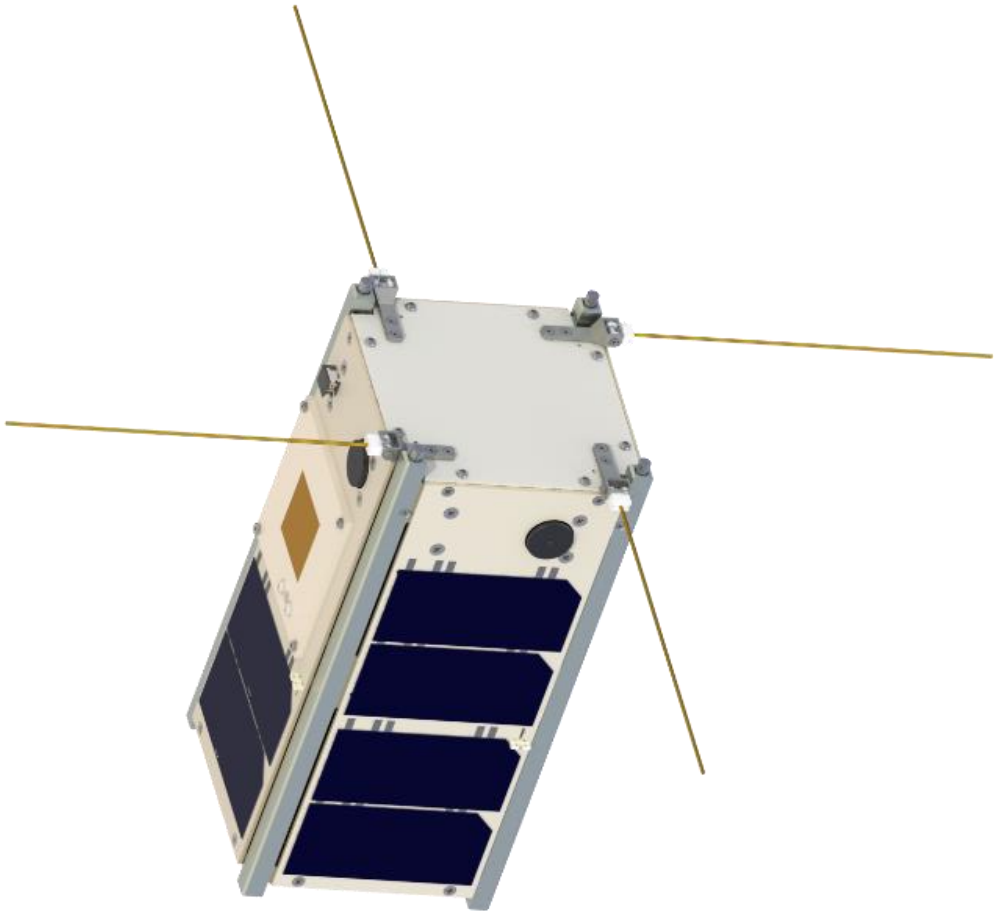

Figure 3. UHF antenna system integrated into a 2U CubeSat platform

5 Mechanical Drawing

Dimensions are given in mm.

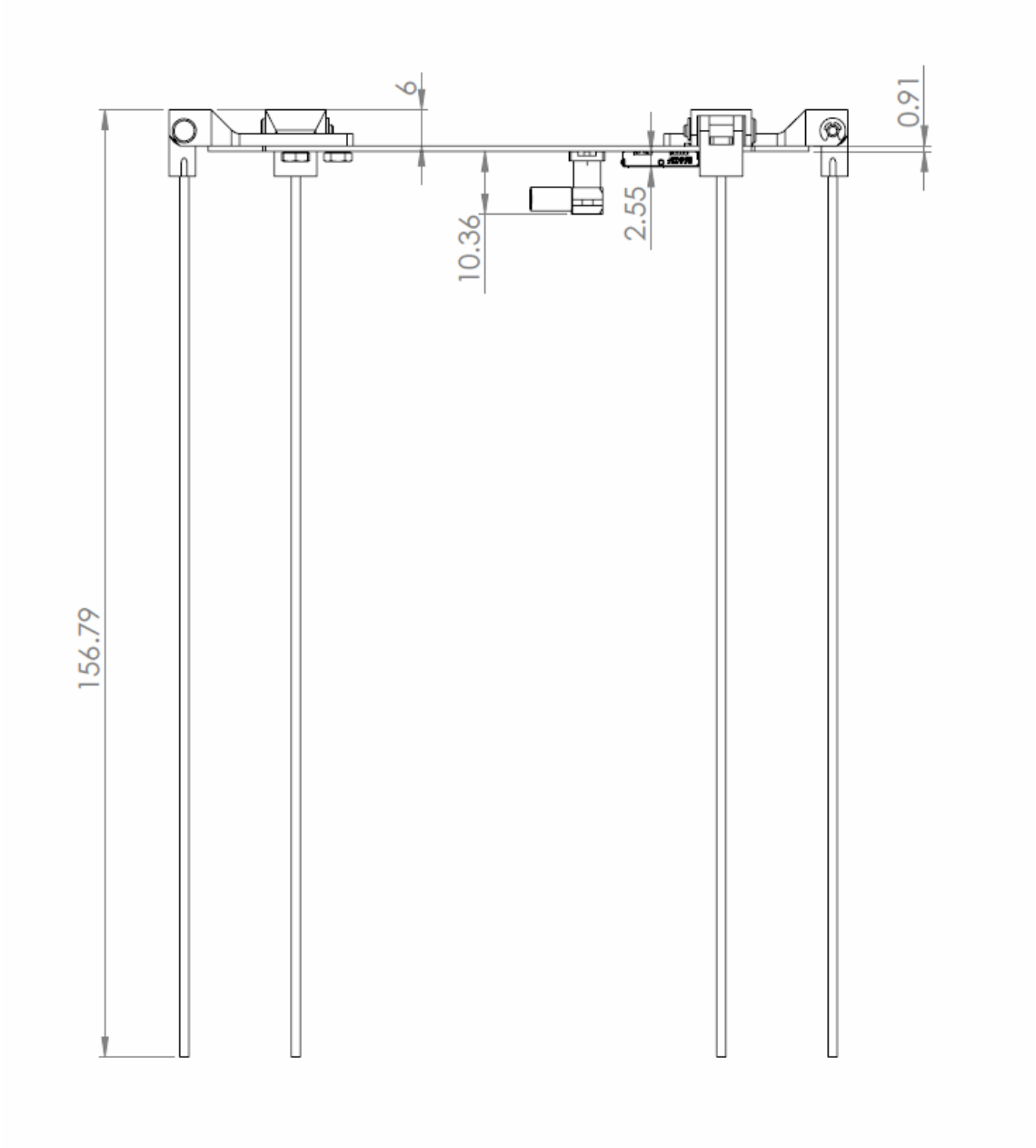

Figure 4. Physical dimensions, undeployed antennae, side view [1]

[1] Drawing is not to scale.

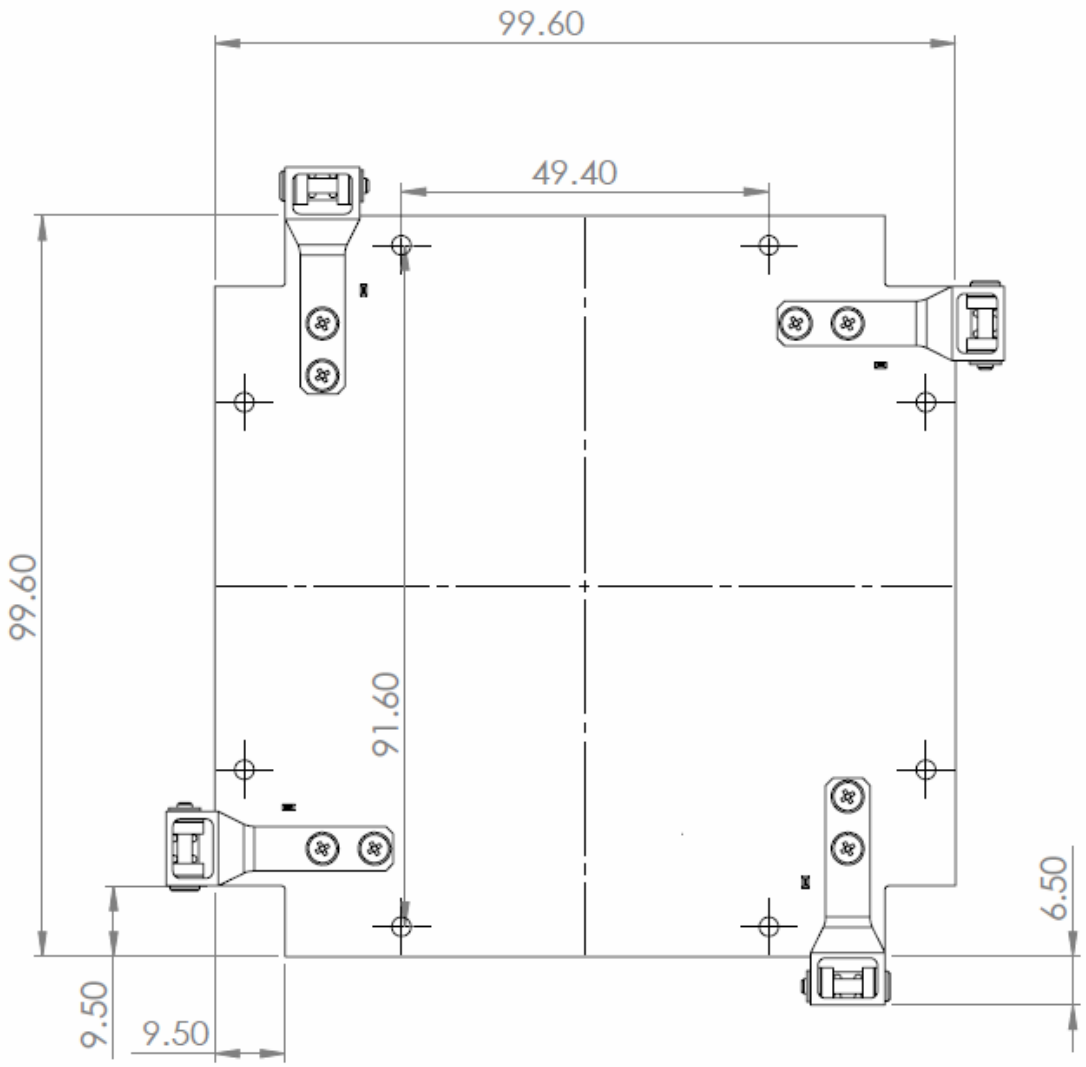

Figure 5. Physical dimensions, top view [2]

6 Disclaimer

The information in this document is subject to change without notice and should not be construed as a commitment by NanoAvionics, LLC. NanoAvionics assumes no responsibility for any errors that may appear in this document.

[2] Drawing is not to scale.