SDL/10-120C

STAR CAMERA

COMPACT, LIGHT-WEIGHT, & LOW POWER STAR IMAGING FOR NANO- & PICO-SATELLITES

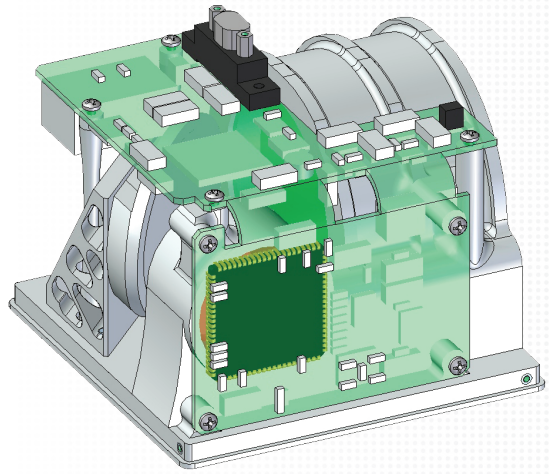

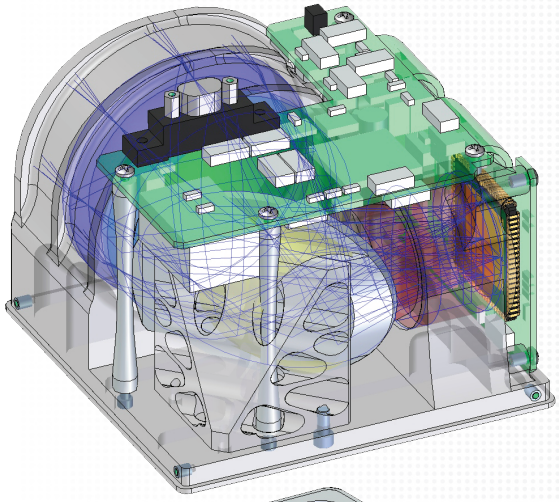

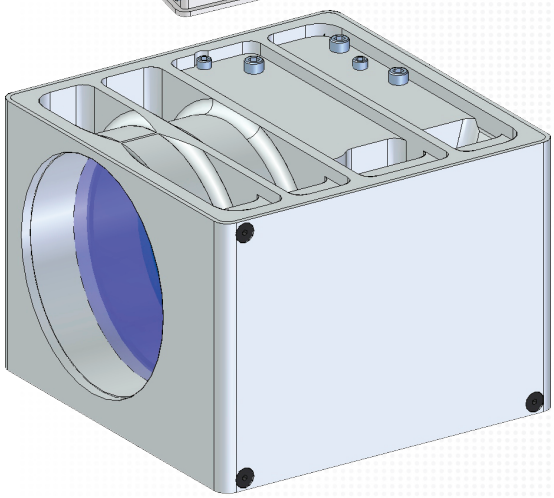

The Space Dynamics Laboratory (SDL) has developed a miniature Star Camera based on its Digital Imaging Space Camera (DISC) product line. The DISC Star Camera is a science-enabling technology for missions that require more stringent pointing knowledge than is currently available on extremely small satellites. Using a radiation-hardened focal plane, it is able to detect down to magnitude 6 stars.

STAR TRACKER OPTION

Also available is SDL's DISC Star Tracking Algorithm with a complete 'Lost in Space' solution for each image. The algorithm computes a quaternion that rotates the bore of each image to the J2000 inertial coordinate frame of the Hipparcos Star Catalog.

SPECIFICATIONS

POWER	< 1 W
MASS	0.8 kg
DIMENSIONS	96 × 96 × 70 mm

FEATURES

- Designed specifically for star imaging
- Sized to fit in a CubeSat
- HAS2 RadHard CMOS FPA
- 60 mm aperture, 13° FOV
- SpaceWire interface
- High-quality, custom optics
- Optional radiation tolerant version

Space Dynamics LABORATORY
Utah State University Research Foundation

1695 North Research Park Way • North Logan, Utah 84341 • Phone 435.713.3400 • www.sdl.usu.edu