PEPT-230





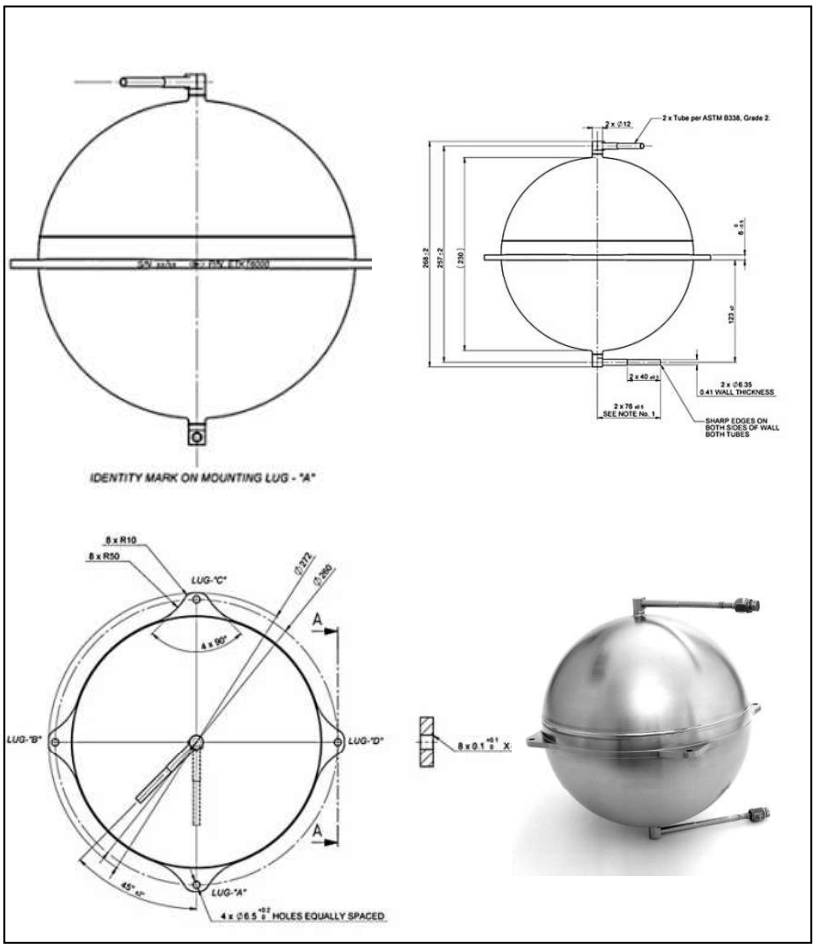

PEPT-230

RAFAEL
SMART AND TO THE POINT

Propellant Tanks PART C

PEPT-230 Main Characteristics

Configuration	Spherical; nominal ∅230 mm
Fluid Media Compatibility	Hydrazine, IPA, distilled water, GN_2, GHe.
Pressurant	GN_2, GHe, inert gases
Nominal Volume	6 liters
Propellant Nominal Capacity	4.5 liters max @ 4:1 blow-down ratio
Liquid Volumetric Expulsion	>99%
Pressure	
Operating	24 to 5.5 bars. approved for SSC requirement of 400 psi
Proof	36 bar
Burst	48 bar (actual rupture >110 bar)
Leakage	
Internal Leakage	$<10^{-2}$ Scc/sec (GN_2)
External Leakage	$<1x10^{-6}$ Scc/s (GHe) at 24 bar
Material	
Tank Material	Ti- 6 Al-4V
Diaphragm Material	EPZ-63
Ports	ø 1/4” titanium tubes
Weight	<1.3 kg
Temperature	
Operating	10°C to 50°C
Qualification	4°C to 60°C
Service Life	
Storage	7 years
Flight	15 years
Mounting	4 lugs at tank's equator with ø6.5 mm clearance holes (90˚ distribution)
Heritage	Qualified for space applications. (Myriade, Prisma) flight heritage with Myriade and Gokturk-2 satellites in orbit