PEPT-420N



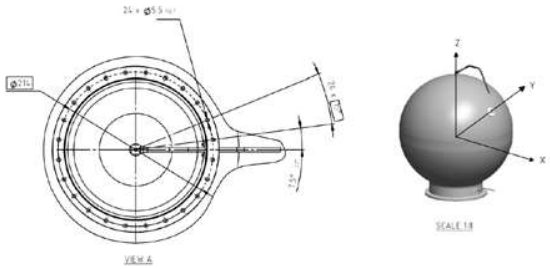

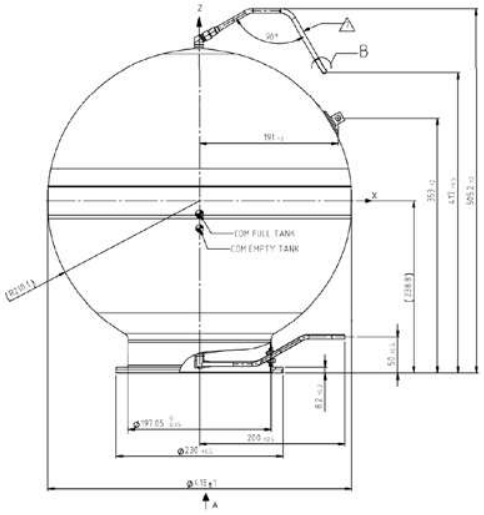

RAFAEL
SMART AND TO THE POINT

Propellant Tanks PART C

PEPT-420N Main Characteristics

Configuration	Spherical, nominal ∅420 mm
Fluid Media Compatibility	Hydrazine, distilled water, IPA, GN_2, GHe
Pressurant	GN_2, GHe
Nominal Volume	37.5 liter
Hydrazine Nominal Capacity	30 kg max., 28 kg @ 4:1 blow-down ratio
Liquid Volumetric Expulsion:	≥ 99.0%
Pressure	
Operating	25.4 to 5.5 bar
Proof	38.1 bar
Burst:	58.2 bar
Leakage	
Internal Leakage	$<1x10^{-2}$ Scc/s (GHe)
External Leakage	$<1x10^{-6}$ Scc/s (GHe)
Material	
Tank Material	Ti-6Al-4V
Diaphragm Material	EPN-40: EPDM type silica-free rubber
Ports	ø 1/4" weldable Ti tube or MS 33656-4 connections
Weight (kg)	3.9
Temperature	
Operating (Qualification)	+4°C to +55°C
Non-Operating (Qualification)	-20°C to +60°C
Service Life	
Storage	7 years
Flight	15 years
Mounting	Pedestal mounting
Heritage	Delivered for CERES, Myriade Evolution, NEOSAT