AAC CLYDE SPACE

Command and data handling

Sirius TCM LEON3FT

This is the latest addition to AAC Clyde Space's Sirius family of avionics equipment. The latest TCM offers increased reliability and high-performance for advanced small and nano-satellite missions. The real-time operating system runs on a LEON3FT fault-tolerant soft processor, is compliant to IEEE 1754 SPARC v8, and provides enhanced error detection and correction. Fault tolerance is secured by using triple-modular redundancy on FPGA and memory scrubbing.

Main Features

- Reliable high-performance space data handling avionics
- Tolerant to Single-Event-Effects (SEE) in logic and data storage
- RTEMS real-time operating system (RTOS)
- 50 MHz LEON3FT soft processor
- SpaceWire on-board data bus
- S- and X-band transceiver interface
- 32 GB mass storage capacity
- CCSDS satellite link services
- Designed and qualified for five years in LEO
- ITAR free equipment
- Modular, nanosatellite compatible, mechanical design
- Pulse commands for low level, basic commanding

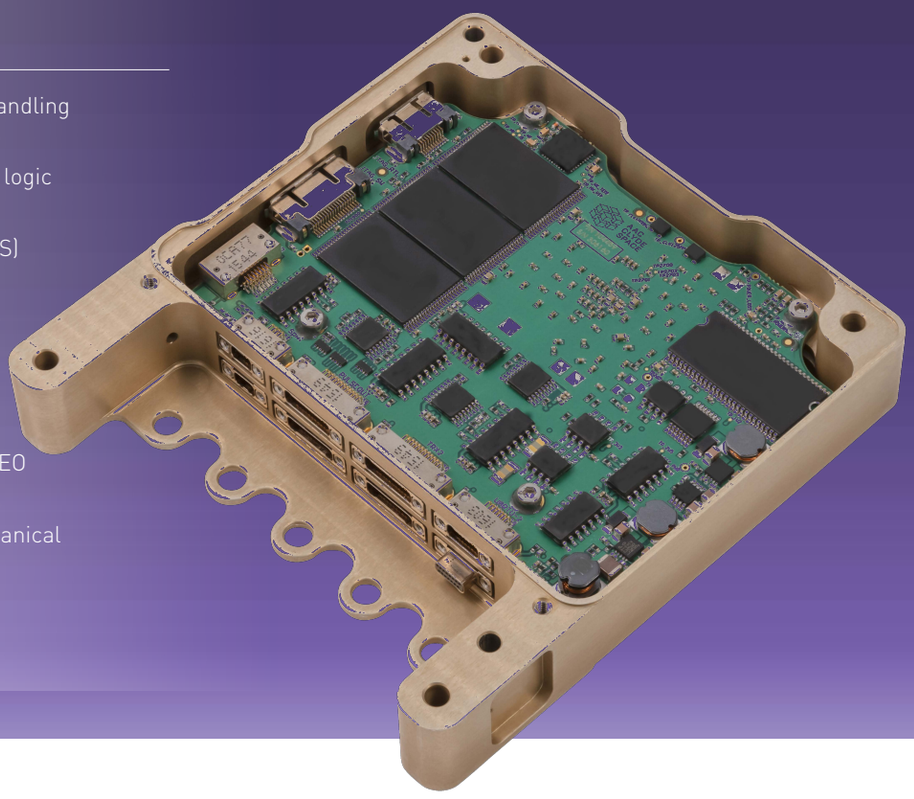

Technologies

The Sirius TCM implements SpaceWire for the main on-board data bus for high bandwidth on-board data transfer. The transceiver interface of the unit implements the CCSDS encoding standards for satellite link services and provides compatibility with leading ground stations networks. The Sirius TCM is supplied with a user-friendly application software for management of on-board services which makes it ready for integration out of the box or with a board support package for custom software development. A desktop development kit is also available for rapid design and integration to new spacecraft platforms.

Modular Design

The Sirius family of spacecraft avionics products are designed for modularity. A standard single string system consists of an on-board computer (Sirius OBC) and a combined mass memory with CCSDS stack (Sirius TCM). The OBC runs mission specific software and manage the spacecraft system. The TCM receives and stores payload data and platform housekeeping data while at the same time distributing telecommands and serving mass memory data to the transceiver. The Sirius avionics modules can be combined to offer redundant configurations or to simply accommodate mission specific requirements.

Technical Specifications

General

Design Life	5 years in LEO
Processor	32-bit LEON3FT (IEEE-1754 SPARC v8) fault-tolerant processor
FPU	IEEE-754 single/double precision FPU
Processor Clock	50 MHz
SCET	15.25 µs accuracy
SDRAM	64 MB (post-EDAC)
Instruction Cache	8 kB
Data Cache	8 kB
NVRAM	16 kB (post-EDAC)
Operating Temperature Range	-30°C to +60°C
Boot Image Storage	2 GB (post-EDAC)
Mass Memory	32 GB
Power Supply Input	4.5 V to 16 V
Radiation (TiD)	20 kRAD (qualified >30 kRAD, Si)

Interfaces

SpaceWire	50 Mbps, RMAP support	2
Serial Ports	RS422 / RS485 UARTs	3
Serial Ports	RS485-only UARTs	2
PSS Interface	RS485 PPS input	1
GPIO	3.3 V logic	12
CCSDS Sband	RS422 level data stream and TRX command and house-keeping	1
CCSDS Xband	LVDS level data stream and both RS422 and LVDS level TRX command and house-keeping	1
CCSDS Umbilical	RS422 level data stream	1
Pulse Command Output	RS422 level CPDU pulse output	12

Size, Weight and Power

Nominal Power Consumption	1.3 W
Mass	134 g
Length	95.89 mm
Width	90.17 mm
Height	17.20 mm

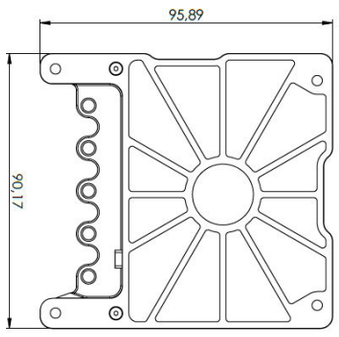

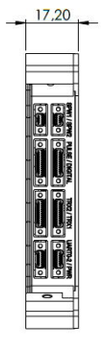

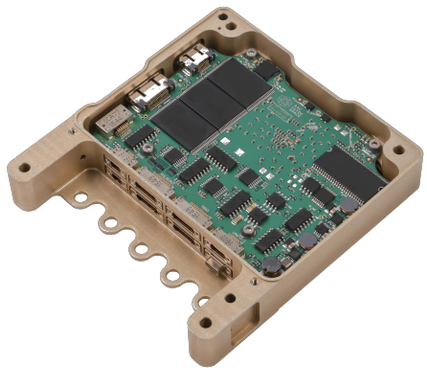

To make an enquiry, request a quotation or learn about AAC Clyde Space's other products and services, please contact enquiries@aac-clyde.space

#spaceisawesome

AAC CLYDE SPACE

Copyright AAC Clyde Space 2019. All rights reserved. All information subject to change. Document number 205348. Release Date 01 Aug 2019