AAC CLYDE SPACE

Command and data handling

Sirius OBC LEON3FT

AAC Clyde Space have developed the Sirius OBC with LEON3FT as a new, reliable, high performance on-board computer ideally suited for advanced missions. Its real-time operating system runs on a LEON3FT fault tolerant soft processor and is compliant to IEEE 1754 SPARC v8, with an emphasis on enhanced error detection and correction. The on board computer is designed for high performance, resilience and reliability.

Main Features

- 50 MHz LEON3FT soft processor
- Reliable high-performance space data handling avionics
- Tolerant to Single-Event-Effects (SEE) in logic and data storage
- RTEMS real-time operating system (RTOS)
- SpaceWire on-board data bus
- Designed and qualified for five years in LEO
- ITAR free equipment
- Modular, nanosatellite compatible, mechanical design
- Pulse commands for low level, basic commanding

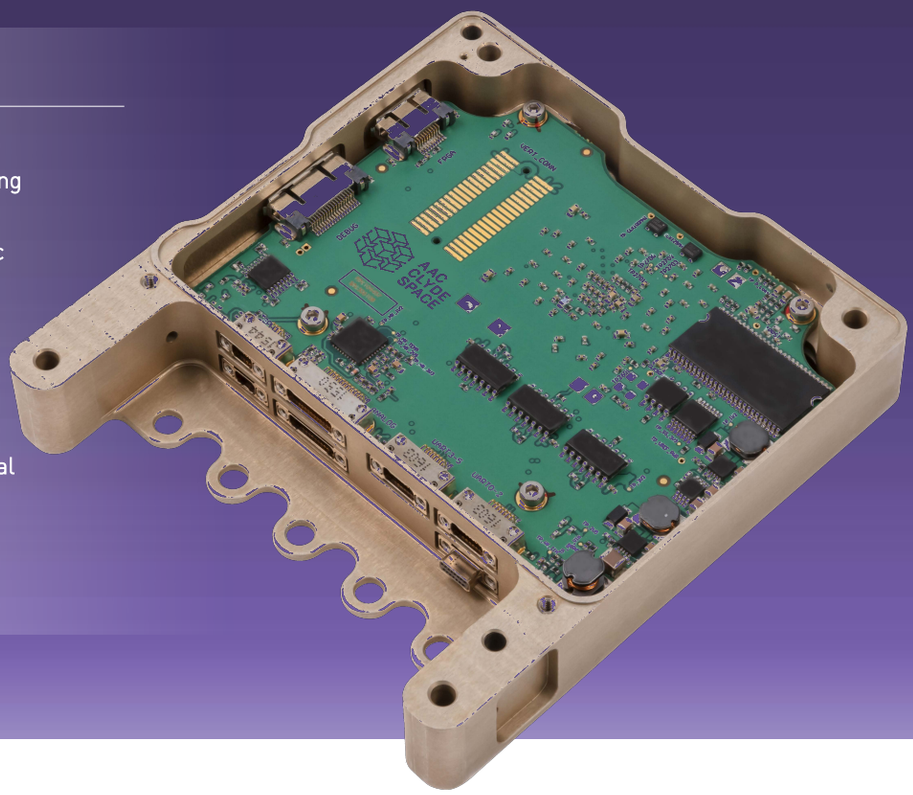

Technologies

The Sirius OBC with LEON3FT enables advanced nanosatellite constellations in LEO and deep space exploration missions due to its focus on high reliability, resilience and performance. Fault tolerance is secured through TMR (Triple-Modular Redundancy) on all FPGA flip-flops and through boot flash and EDAC (error detection and correction) on memories. Sirius OBC is tolerant to Single-Event-Effects (SEE) in logic/data storage and the equipment is ITAR free.

Modular Design

The Sirius products are designed for modularity. A standard single string system consists of an on-board computer (Sirius OBC) and a combined mass memory with CCSDS stack (Sirius TCM). The OBC runs mission specific software and manage the spacecraft system. The TCM receives and stores payload data and platform housekeeping data while at the same time distributing telecommands and serving mass memory data to the transceiver. A Sirius data handling system is easily adapted for additional capacity and redundancy by adding modules.

Technical Specifications

General

Expected Life	5 years in LEO
Processor	32-bit LEON3FT (IEEE-1754 SPARC v8) fault-tolerant processor
FPU	IEEE-754 single/double precision FPU
Processor Clock	50 MHz
SCET	15.25 µs accuracy
SDRAM	64 MB (post-EDAC)
Instruction Cache	8 kB
Data Cache	8 kB
NVRAM	16 kB (post-EDAC)
Operating Temperature Range	-30°C to +60°C
Nonvolatile System Memory Nand Flash	2 GB (post-EDAC)
Power Supply Input	4.5 V to 16 V
Radiation (TiD)	20 kRAD (qualified >30 kRAD, Si)

Interfaces

SpaceWire	50 Mbps	2
Serial Ports	RS422 / RS485 UARTs	6
Serial Ports	RS485-only UARTs	2
PSS Interface	RS485 PPS input / output	1/1
Analog Input Buffered	24 bit, up to 31250 SPS	8
GPIO	3.3 V logic	16
Debugging	JTAG port for CPU debugging via GRMON/GDB	1

Size, Weight and Power

Nominal Power Consumption	1.3 W
Mass	130 g
Length	95.89 mm
Width	90.17 mm
Height	17.20 mm

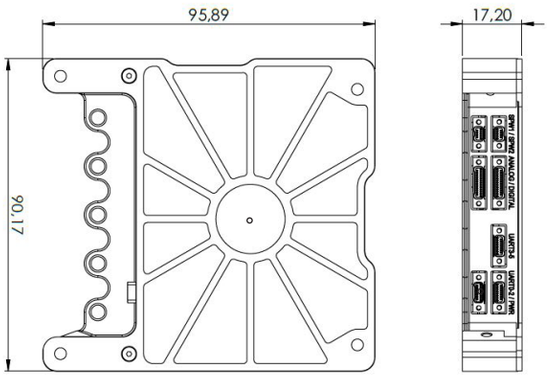

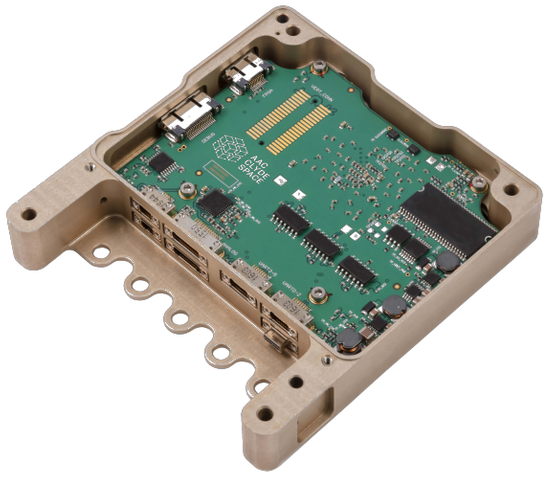

To make an enquiry, request a quotation or learn about AAC Clyde Space's other products and services, please contact enquiries@aac-clyde.space

#spaceisawesome

AAC CLYDE SPACE

Copyright AAC Clyde Space 2019. All rights reserved. All information subject to change. Document number 205347. Release Date 01 Aug 2019