BLUE CANYON TECHNOLOGIES

Spacecraft Buses, Systems & Solutions

STAR TRACKERS

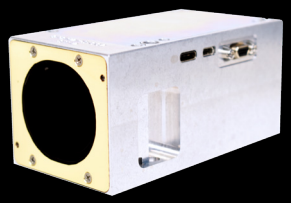

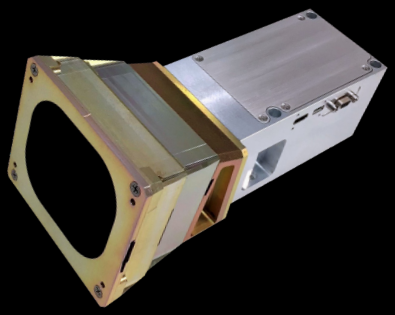

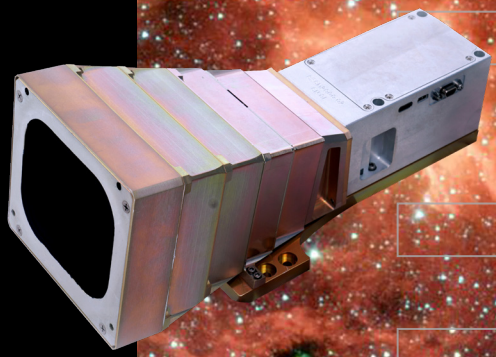

Our star trackers are currently operating on-orbit, supporting numerous successful customer missions.

The industry-trusted Blue Canyon Technologies Nano Star Tracker (NST) is compatible across spacecraft platforms and suited for even the most challenging and sensitive missions. Extensive flight heritage and proven, best-in-class performance make our star tracker the ideal fit for standalone missions or constellations.

Our star tracker is qualified beyond GEVS level environments, giving our customers a low SWaP-C solution with stunning capabilities. The turnkey starlight-in, quaternion-out system integrates easily and comes with user-friendly documentation.

FEATURES INCLUDE:

- Heritage exceeding 100 trackers
- Low SWaP-C
- Tracks stars down to 7.5 magnitude
- On-board star catalog (>20,000 stars)
- Lost-in-space star identification
- Shock test qualified
- EMI/EMC tested to MIL-STD-461
- User friendly RS-422 or RS-485 interface

STAR TRACKERS

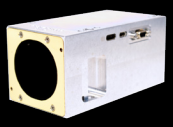

STANDARD NST

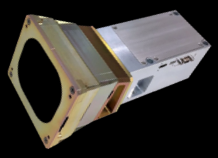

MID EXTENSION NST

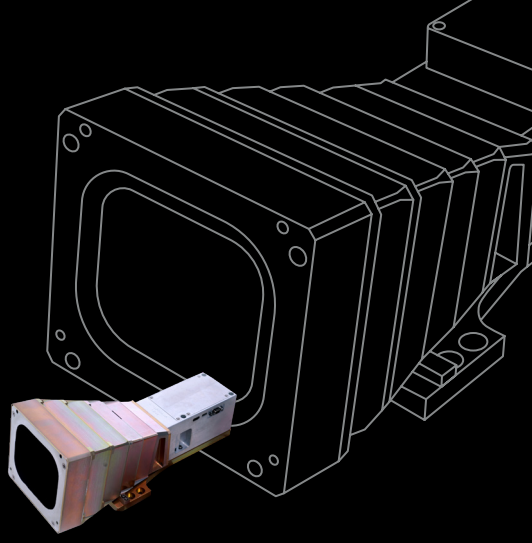

FULL EXTENSION NST

ATTITUDE KNOWLEDGE	Gen3: **1 asec** (cross boresight); **10 asec** (about boresight) Gen2: **6 asec** (cross boresight); **40 asec** (about boresight)		
OPERATIONAL RANGE	-20°C to +50°C (full performance)		
SOLUTION RATE	5 Hz		
SKY COVERAGE	> 99%		
LOST-IN-SPACE STAR IDENTIFICATION	< 4 sec (up to 1.5 deg/s)		
FIELD OF VIEW	10 x 12 deg		
POWER INPUT	5V or 28V		
PEAK POWER	< 1.5W @ 5V		
MASS	0.35kg	0.46kg	0.85 kg
VOLUME	10 x 5.5 x 5 cm	17 x 8.5 x 7 cm	25 x 10 x 10 cm
SUN KEEP OUT (HALF CONE)	45 deg	22 deg	17.5 deg
MISSION LIFE	LEO >10 (standard shielding) GEO >7 years (enhanced shielding)		

BLUE CANYON TECHNOLOGIES

2550 Crescent Drive,
Lafayette, CO 80026

BLUECANYONTECH.COM