

Top

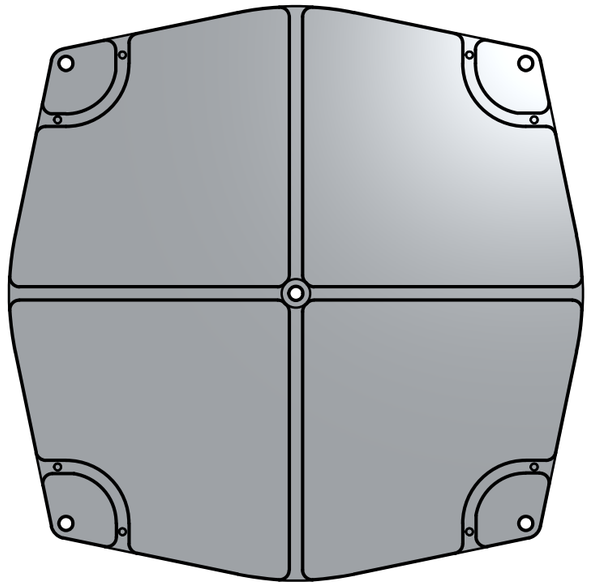

Bottom



Isometric

FUNCTIONAL			
Parameter	**Value**	**Unit**	**Status**
Momentum	20	N.m.s	D
Torque	0.4	N.m	D
Control	Speed or Acceleration		
Feedback	Speed		
Communication	Redundant CAN FD/RS485		
MECHANICAL			
Mass	5.5±0.1	kg	D
Static Imbalance	2.5	g.mm	D
Dynamic Imbalance	TBD	g.mm²	-
ELECTRICAL			
Bus Voltage	24 to 34	V	D
Power (Idle)	TBD	W	-
Power (20Nms/0Nm)	TBD	W	-
Power (Max Draw)	TBD	W	-
Power (Max Regen)	TBD	W	-
ENVIRONMENT			
Temperature	-20 to 60	°C	D
Random Vibe	10	grms	D
Shock	1000	g	D
Radiation (TID)	30	krad	D

NOTES
1. PRELIMINARY SPECIFICATION SUBJECT TO CHANGE.
2. ENVIRONMENTS PROVIDED ARE OPERATIONAL. QUALIFICATION IS PERFORMED AT HIGHER LEVELS ACCORDING TO ECSS/NASA STANDARDS.
3. STATUS CATAGORIES
   - D: DESIGN AND ANALYSIS
   - P: PROVEN DURING PRELIMINARY DEVELOPMENT
   - C: PROVEN DURING CRITICAL DEVELOPMENT
   - Q: PROVEN DURING QUALIFICATION

UNLESS OTHERWISE SPECIFIED:

DIMENSIONS ARE IN MM
BREAK SHARP EDGES 0.2MM MAX
INTERNAL CORNER R0.2MM MAX
REMOVE BURRS

TOLERANCES:
00 = ± 0.20
00.0 = ± 0.10
00.00 = ± 0.05
ANGULAR = ± 5°

FIRST ANGLE PROJECTION

	NAME	SIGNATURE	DATE
DRAWN	ADAM WADE		2026-11-26
CHECKED			
APPROVED	ADAM WADE		2026-11-26
MATERIAL			
FINISH			

ABSTRACT SPACE

TITLE: ASSY; ABS-RWA-225

SIZE A3 | DWG NO. ABS-RWA-225 | REV.

SCALE 1:3 | MASS 5.5 KG | SHEET 1 of 4

6	5	4	3	2	1

MASS PROPERTIES

Parameter	Value	Unit	Status
Ixx	0.0359	kg.m²	D
Iyy	0.0356	kg.m²	D
Izz	0.0707	kg.m²	D

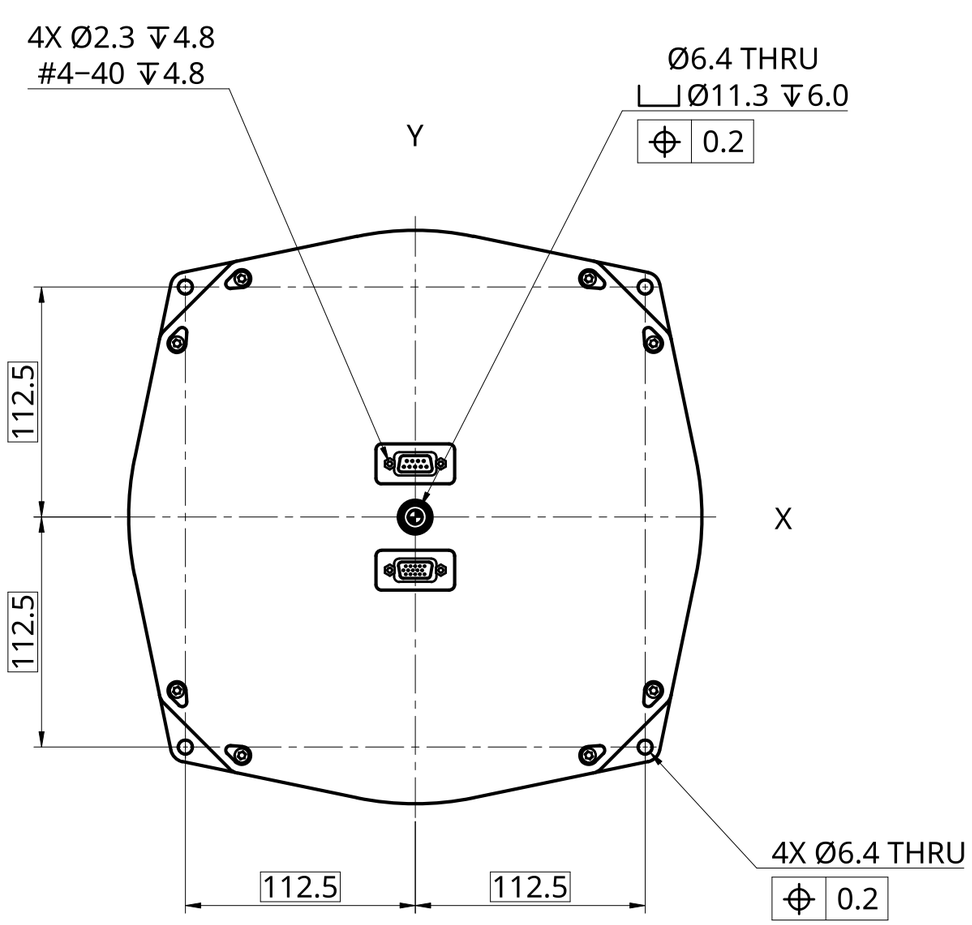

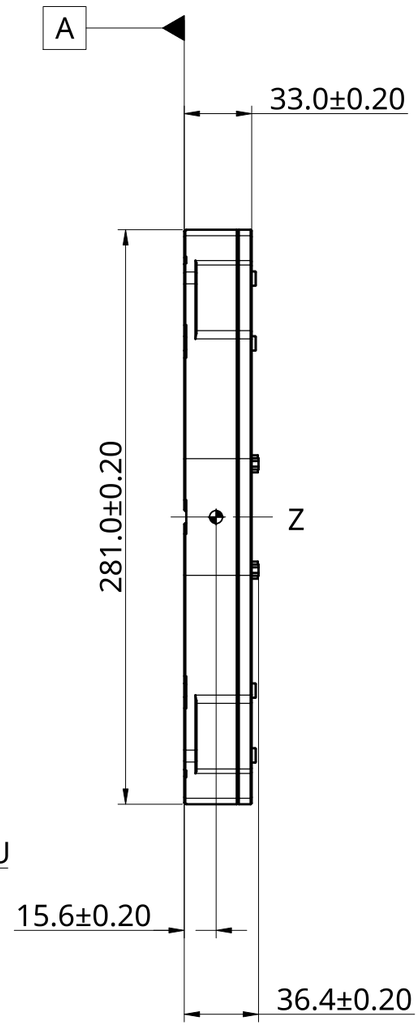

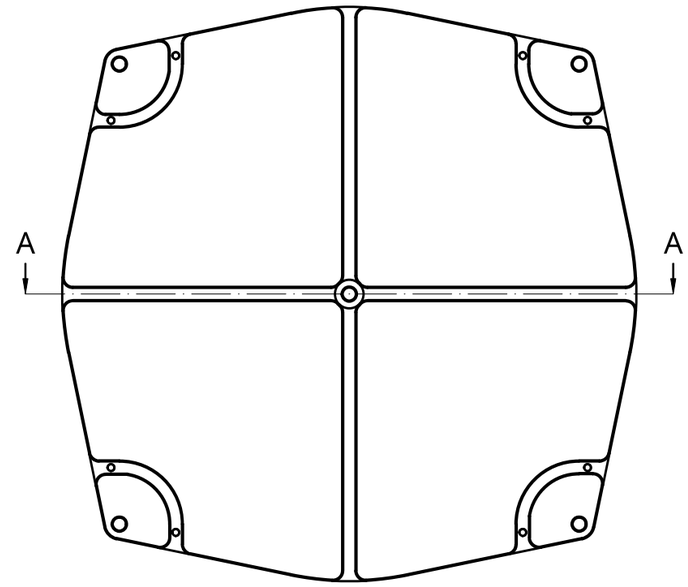

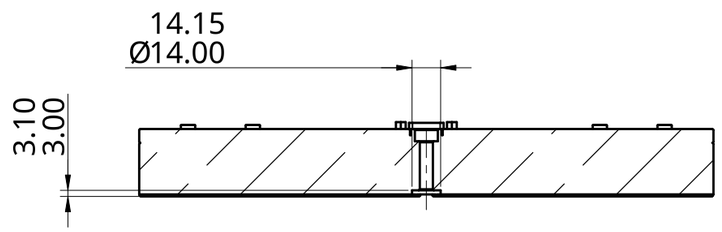

A - A

ROTOR PROPERTIES

Parameter	Value	Unit	Status
COM Offset (From A)	13.4±0.2	mm	D
Inertia	0.0403±5%	kg.m²	D
Axial Mode	TBD	Hz	-
Radial Mode	TBD	Hz	-
Rocking Mode	TBD	Hz	-
Critical Speed	TBD	rad/s	-

UNLESS OTHERWISE SPECIFIED:		NAME	SIGNATURE	DATE	ABSTRACT SPACE
DIMENSIONS ARE IN MM BREAK SHARP EDGES 0.2MM MAX INTERNAL CORNER R0.2MM MAX REMOVE BURRS	DRAWN	ADAM WADE		2026-11-26	TITLE: ASSY; ABS-RWA-225
TOLERANCES: 00 = ± 0.20 00.0 = ± 0.10 00.00 = ± 0.05 ANGULAR = ± 5°	CHECKED				
	APPROVED	ADAM WADE		2026-11-26	
	MATERIAL				
FIRST ANGLE PROJECTION	FINISH				SIZE A3 · DWG NO. ABS-RWA-225 · REV. · SCALE 1:3 · MASS 5.5 KG · SHEET 2 of 4

6	5	4	3	2	1

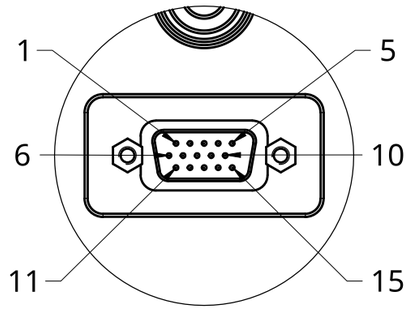

C
1:1

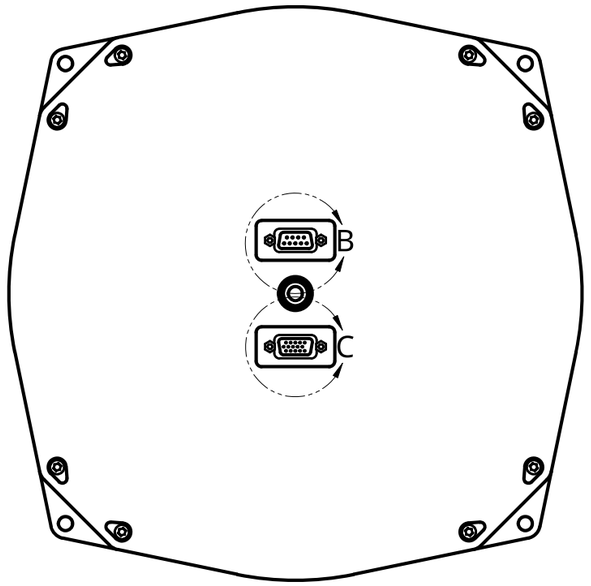

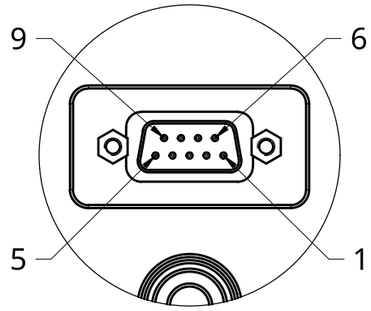

B
1:1

POSITRONIC SDD15M32000G		
Pin	**Signal**	**Description**
1	CAN_H	Primary CAN FD Bus
2	CAN_L	
6	CAN_GND	
11	CAN_H	Redundant CAN FD Bus
12	CAN_L	
7	CAN_GND	
4	RS485_A	Primary RS485 Bus (Half Duplex)
5	RS485_B	
9	RS485_GND	
14	RS485_A	Redundant RS485 Bus (Half Duplex)
15	RS485_B	
10	RS485_GND	
3	THM+	PT1000 near connector (TRP)
8	THM-	
15	CHASSIS	Dedicated Chassis Ground Pin

POSITRONIC SND9M36000G		
Pin	**Signal**	**Description**
1	RESET	Drive Electronics Reset
2	BUS_28V	28V Unregulated (10A Max Shared)
3	BUS_28V	
4	BUS_28V	
5	BUS_28V	
6	BUS_GND	Bus Ground Return
7	BUS_GND	
8	BUS_GND	
9	BUS_GND	

UNLESS OTHERWISE SPECIFIED:

DIMENSIONS ARE IN MM
BREAK SHARP EDGES 0.2MM MAX
INTERNAL CORNER R0.2MM MAX
REMOVE BURRS

TOLERANCES:
00 = ± 0.20
00.0 = ± 0.10
00.00 = ± 0.05
ANGULAR = ± 5°

FIRST ANGLE PROJECTION

	NAME	SIGNATURE	DATE
DRAWN	ADAM WADE		2026-11-26
CHECKED			
APPROVED	ADAM WADE		2026-11-26
MATERIAL			
FINISH			

ABSTRACT SPACE

TITLE
ASSY; ABS-RWA-225

SIZE A3 | DWG NO. ABS-RWA-225 | REV.

SCALE 1:3 | MASS 5.5 KG | SHEET 3 of 4

Product Revision History

Version	Date	Description
V0.1.0	27 NOV 2026	Initial preliminary development prototype.

ICD Revision History

Version	Date	Description
V0.1.0	27 NOV 2026	Initial issue capturing conceptual specification.

UNLESS OTHERWISE SPECIFIED:

DIMENSIONS ARE IN MM
BREAK SHARP EDGES 0.2MM MAX
INTERNAL CORNER R0.2MM MAX
REMOVE BURRS

TOLERANCES:
00 = ± 0.20
00.0 = ± 0.10
00.00 = ± 0.05
ANGULAR = ± 5°

FIRST ANGLE PROJECTION

	NAME	SIGNATURE	DATE
DRAWN	ADAM WADE		2026-11-26
CHECKED			
APPROVED	ADAM WADE		2026-11-26

MATERIAL

FINISH

ABSTRACT SPACE

TITLE

ASSY; ABS-RWA-225

SIZE	DWG NO.	REV.
A3	ABS-RWA-225	

SCALE	MASS	SHEET
	5.5 KG	4 of 4